WORKSHOP MANUAL

Volume
2

F355

Ferrari Servizio Assistenza Tecnica

355 F1

April *'98*

CLUTCH - GEARBOX

D1

CONTENTS

Variants for F1 gearbox

- Clutch **D3**
- Air bleeding **D4**
- Gearbox general features **D6**
- Removing the gearbox from the car **D6**

- Pulse feeler **D7**
- Standard concepts of the "F1 gearbox" system for 355 F1 .... **D8**

- Diagnosis AIDS **D51**
- Disassembly and new assembly procedures of the hydraulic system parts **D67**
- Basic parts and tightening torques **D74**

- Tool summary table **D74**

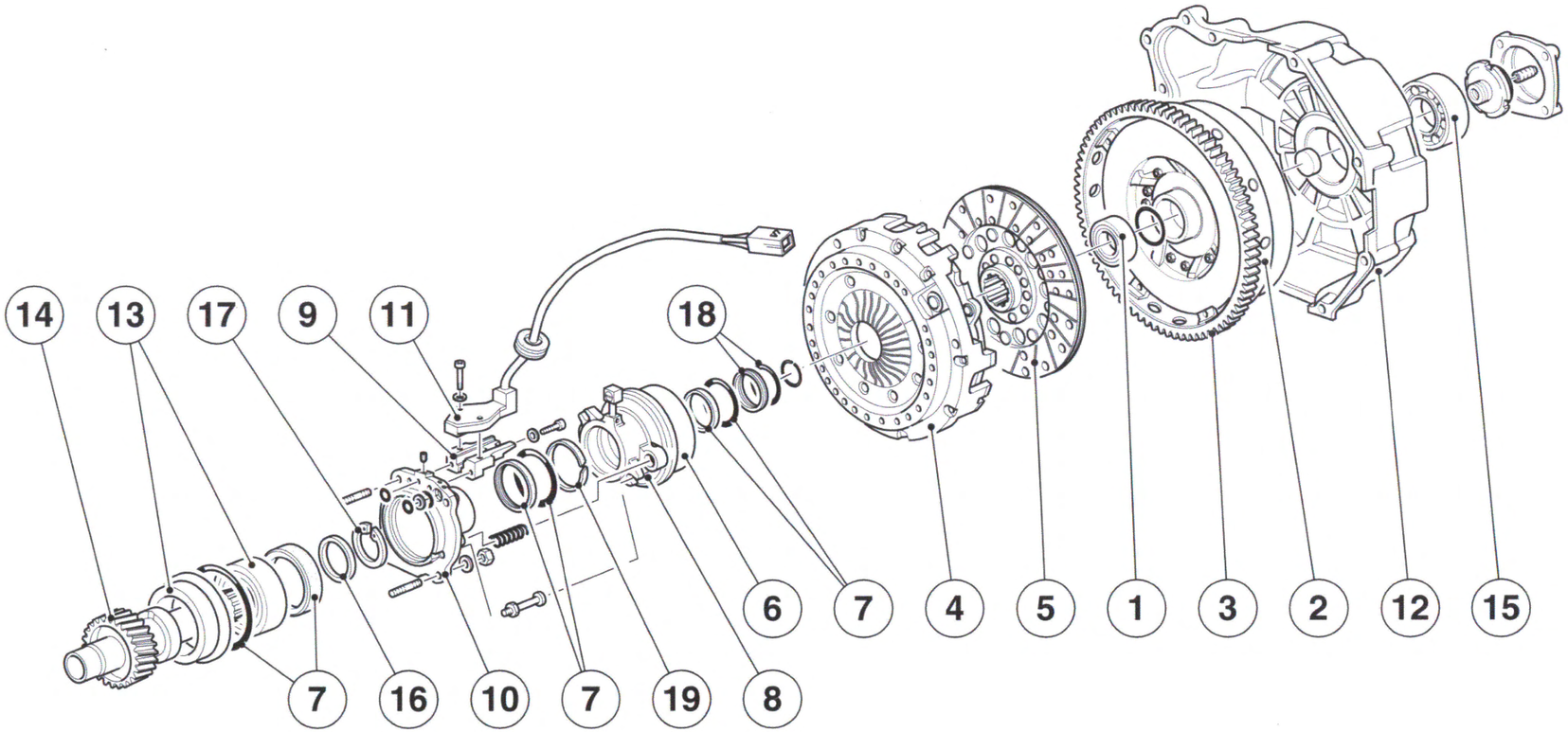

Fig. 1 - Clutch aasembly

1 - Bearing;
2 - Voith damping flywheel;
3 - Flywheel ring gear;
4 - Pressure plate;
5 - Clutch plate;
6 - Clutch bearing;
7 - Seal rings;
8 - Thrust bearing supporting bush;
9 - Bush positioning plate;
10 - Flange-sleeve for thrust bearing supporting;
11 - Clutch sensor;
12 - Clutch housing;
13 - Bearing and liner;
14 - Clutch shaft with drive gear;
15 - Bearing;
16 - Shim spacer;
17 - Snap ring;
18 - Scraping ring;
19 - Shoe.

Hydraulic thrust bearing specifications	
Working surface ..... mm^2	684.4
Max. stroke ..... mm	~ 16
Return spring load ..... da N	7.35

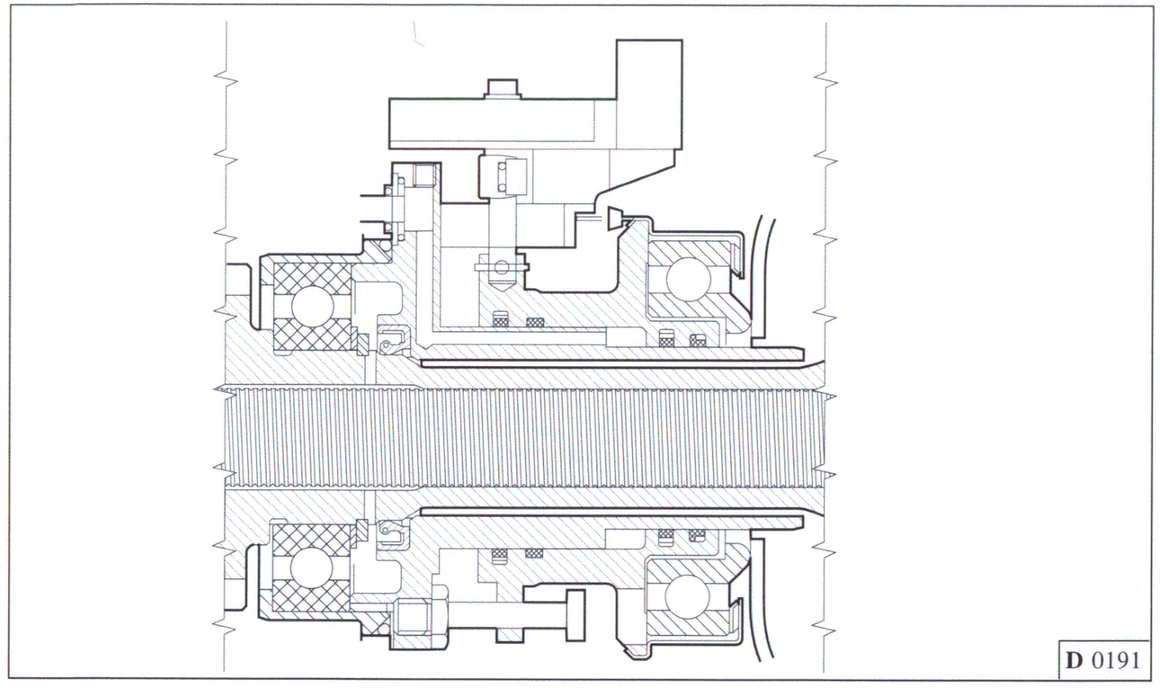

Fig. 2 - Hydraulic thrust bearing

AIR BLEEDING

Air bleeding must be made through the bleed screw **B** (Fig. **3**) placed on the gearbox housing left side.

The operations to be made are the following:

— connect the **SD1** system to the diagnosis socket, turn the ignition key in run position.

— Fill the oil tank, connect the bleed screw to a pipe for oil drain, then loosen the screw.

— Start the "Hydraulic circuit air bleeding programme" of the **SD1** system;

bleeding is made automatically.

— Check the oil level in the tank: it must be at max.; when the writing "**OK**" for completed operation is displayed, tighten the bleed screw.

— Wait about two minutes, so that the pressure is restored in the system.

— Top up oil in the tank: it should be ~5 mm below the min. mark, with fully screwed-in cap.

— Try to engage and release all gears and check if everything is correct; check oil level once more, then remove the ignition key and disconnect the diagnosis system.

The liquid coming out from the bleed screw should not be used anymore.

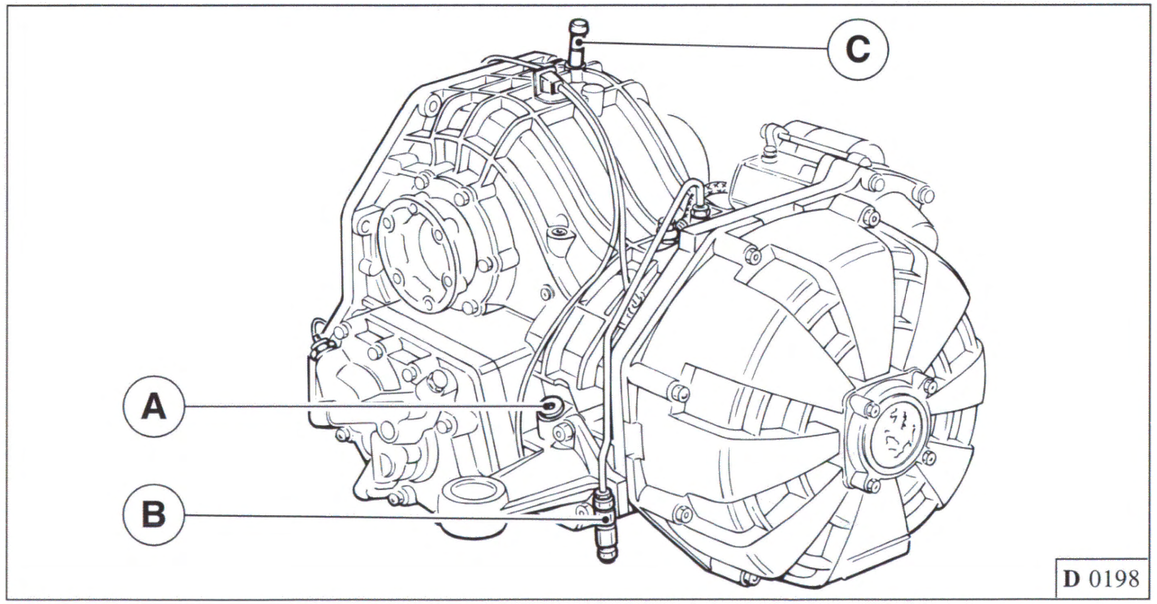

Fig. 3 - Gearbox assembly

A - Filler cap with dipstick for oil top up and level check.
B - Air bleed screw from clutch/gearbox hydraulic control circuit.
C - Gearbox housing bleed valve.

GEARBOX GENERAL FEATURES

The electrically-operated, transversal gearbox, features 6 forward ranges and reverse.

The transmission housing includes the transmission bevel gear pair and the straight spur gear of the lamellar self-locking differential.

The differential is lubricated through the gearbox lubrication system and the system has an oil/water heat exchanger.

REMOVING THE GEARBOX FROM THE CAR

— Remove the rear wheels and gravel guards.
— Remove the air vent slides from the undertray.
— Remove the air cleaner boxes.
— Remove the rear bumper and exhaust silencer.

Disconnect the gearbox mechanism as follows:

— remove the gearbox control lever from the actuator.
— Remove the rear cross member.
— Disconnect the earth braid on the right side of the gearbox.
— Remove the front cross member and disconnect the axle shafts from the gearbox.
— Remove the connection of the clutch sensor, of the odometer sender and of the other electrical connections.

— Remove the clutch control Bowden cable through the quick-coupling fitting.

– Remove the torsion bar.
– Extract the gearbox support screws.

– Remove the bolts fastening the clutch housing.
– Position the gearbox on tool **AM 104961** fitted to a jack and slowly remove the gearbox, taking care to keep it aligned with the engine.

PULSE FEELER

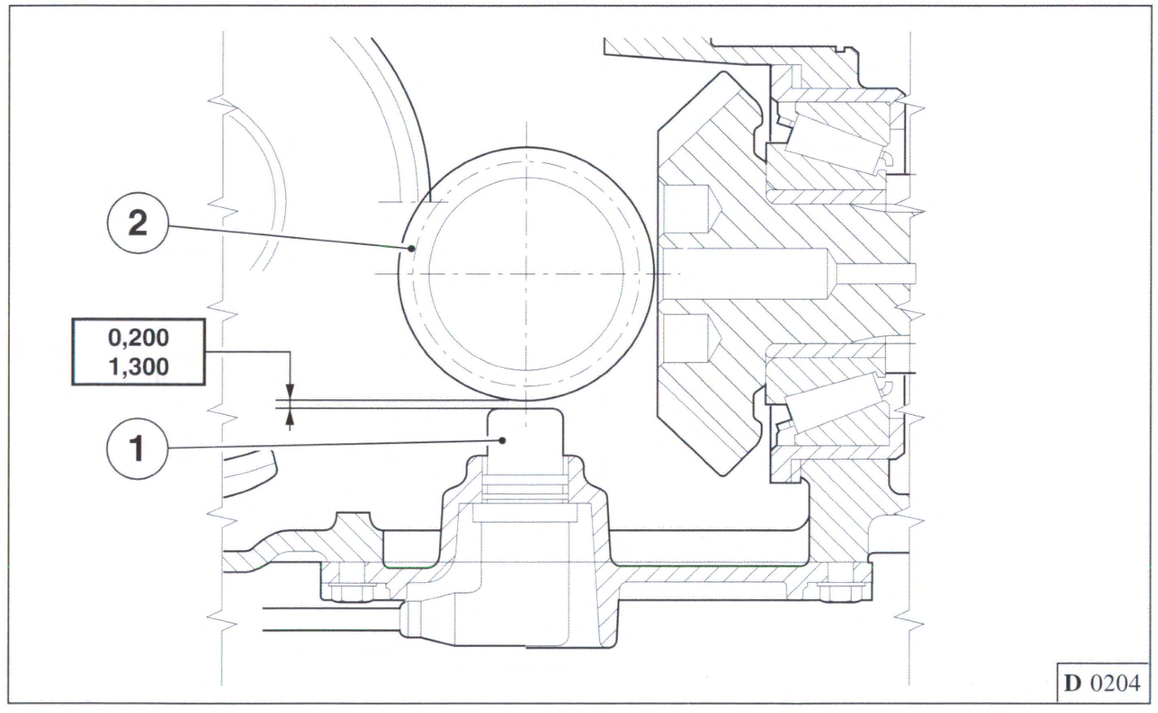

Fig. 6 - Pulse feeler for main shaft revolution detection

1 - Pulse feeler.
2 - Second range gear on main shaft.

CONTENTS

1. Standard concepts of the "F1 gearbox" system for 355 F1

1.1. Introduction **D10**
1.2. General features **D12**

1.3. Transmission control unit **D16**
1.4. System operating architecture **D17**

1.5. Hydraulic interlocking **D19**

2. System parts

2.1. Power unit **D22**
2.2. Actuator unit **D24**

2.3. Clutch control actuator **D24**
2.4. Measuring sensors **D25**
2.4.1. Accelerator pedal potentiometer **D26**
2.4.2. Gear selection position sensor **D27**
2.4.3. Gear engagement position sensor **D28**

2.4.4. Clutch position sensor and control unit **D28**
2.4.5. Gearbox input shaft revolution sensor **D30**
2.4.6. Hydraulic circuit pressure sensor **D30**
2.4.7. Car speed sensor **D30**

2.4.8. Engine rotation speed sensor **D31**
2.4.9. Driver's side door opening switch **D32**
2.4.10. Engine hood switch **D32**

2.5. Driver's controls **D33**

2.6. Display and buzzer **D34**

2.7. TCU pin-out and system harness **D36**

3. System functions

3.1. Technical functions **D38**

3.1.1. Hydraulic power generating unit control **D38**

3.1.2. Driver's request detection

3.1.3. Information transmission to the driver **D8**

3.1.4. Clutch control **D38**

3.1.5. Gearbox control **D45**

3.1.6. Interfacing to the engine monitoring system **D46**

3.1.7. Interfacing to the diagnosis system **D47**

3.2. Safety functions **D48**

Diagnosis AIDS **D51**

Disassembly and new assembly procedures of the hydraulic system parts **D67**

1. Standard concepts of the "F1 GEARBOX" system for Ferrari 355 F1

1.1. Introduction

The "F1 gearbox" transmission system concept for Ferrari 355 F1 has been created with the aim of:

- improving the performances of the manual mechanical transmission parts;

- avoiding control of the clutch pedal and the gearbox control lever by the driver, while ensuring the pleasure of driving, due to the transmission direct control;

- improving driving safety, through a control that prevents driver's faults and an incorrect operation of the transmission system;

- offering a state-of-the art car interface.

The system is mainly a mechanical transmission: dry single-plate clutch and synchronized mechanical gearbox, driven by an hydraulic interlocking.

No modification is required to the clutch or gearbox to fit the hydraulic actuators controlling the clutch stroke and the gear engagement and selection movements.

Gear changes, required by the driver or automatically engaged by the control, depending on the set operation mode, are operated automatically by the system, without any intervention by the driver.

The clutch pedal has been removed; the special electronically-managed levers

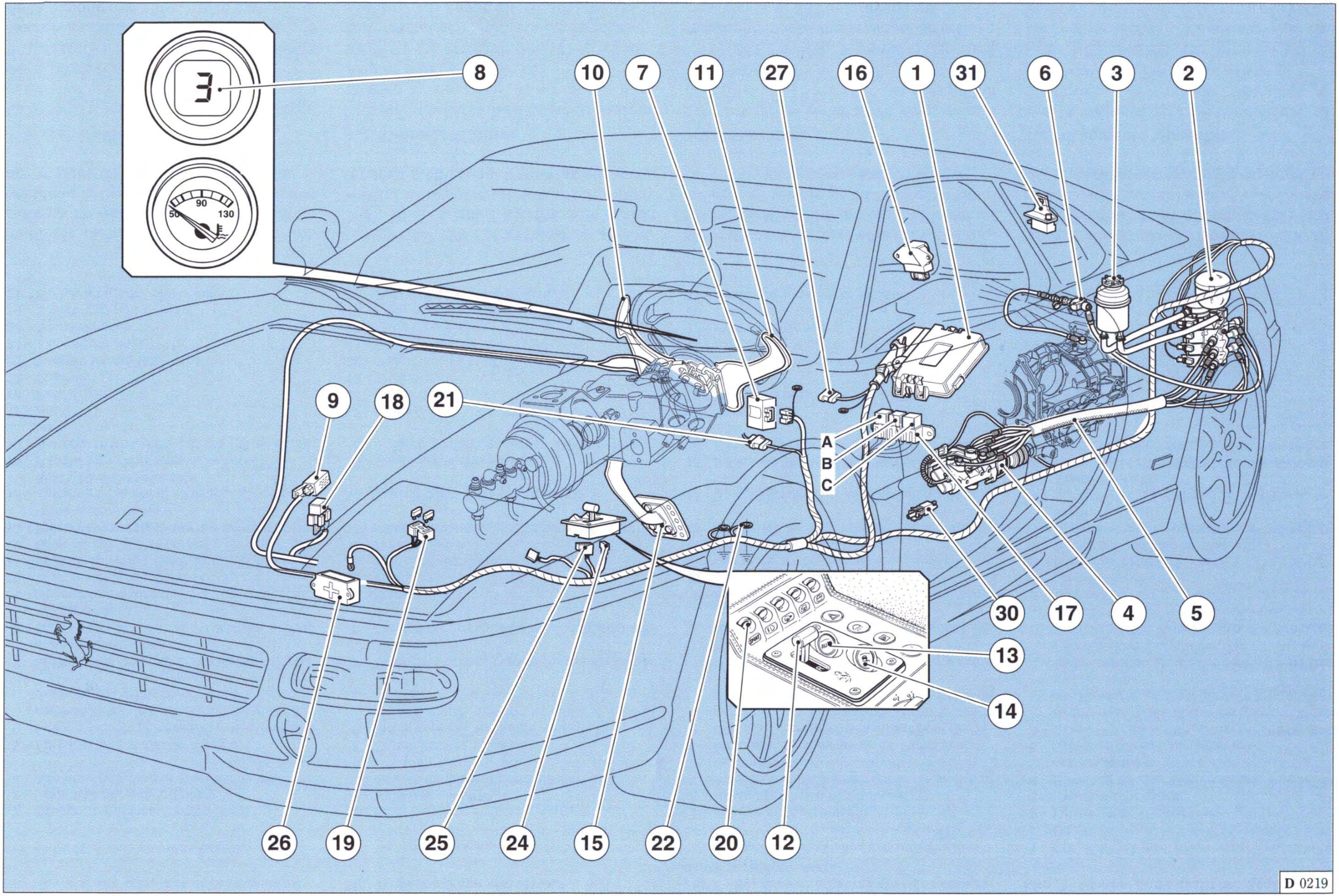
3
50
90
130
8
10
7
11
27
16
1
31
6
3
2
9
18
21
A
B
C
30
17
4
5
13
14
26
19
25
24
15
22
20
12
D 0219

Fig. 7 - Part system and lay-out

1 - Transmission control unit (TCU);

2 - Power Unit;
3 - Hydraulic oil tank;
4 - Gear engagement and selection actuator;

5 - Clutch control actuator;
6 - Quick coupling for clutch control circuit cut-off and clutch opening in case of system failure;

7 - Electronic control module for the clutch position sensor;
8 - Display for engaged gears and system status;
9 - Buzzer;
10 - Upshifting lever;
11 - Downshifting lever;
12 - Reverse lever;
13 - "Automatic" mode push button;

14 - "Low friction" mode push button;
15 - Brake pedal and switch;
16 - Throttle position sensor (potentiometer);

17 - Relay;
18 - Diode bridge;
19 - Fuses;
20 - "Sport" mode switch;
21 - CAN line connector;
27 - Diagnosis socket;
30 - Door opening switch;
31 - Engine hood opening switch.

placed behind the steering wheel according to the Formula 1 transmission lay-out replaced the standard H-shaped gearbox lever of mechanical transmissions.

1.2. General features

The technology of the electronic gearbox studied for Formula 1 is nowadays a reality of mass-production.
The "F1 GEARBOX" (Fig. **7**) is a gearbox and clutch "hydraulic interlocking" system, that keeps all the advantages of

dry clutch and mechanical gearbox (reduced weight, sturdiness and reliability, low energy consumption).

At the same time, it simplifies the gearbox use and reduces driving fatigue in city traffic or in case of frequent gear changes. It features brilliant performance, soft gear shifting, progressiveness of the torque at the wheels.

Thanks to the hydraulic interlocking and the interfacing to the engine monitoring system, the system can offer sports or comfortable and soft gear shiftings, depending on the driver's requests and his driving style.

The clutch pedal is no more available in the compartment; the gearbox lever is replaced by electric controls (Up-Down) on the steering wheel, like on Formula 1 cars.

Thus, the "F1 GEARBOX" relieves the driver from all those boring and hard features linked with transmission management, without depriving him of the pleasure of a direct transmission control. Should he decide, in special conditions, to give up to the manual control, the fully-automatic gearbox management is available, too.

The interlocking system is mainly formed by a hydraulic actuator (**4**), directly fitted on the gearbox housing, that manages the gear selection and engagement movement, through two different pistons.

These two pistons are driven by a set of solenoid valves (**2**) supplied by an electric pump and an accumulator to get the required hydraulic power.

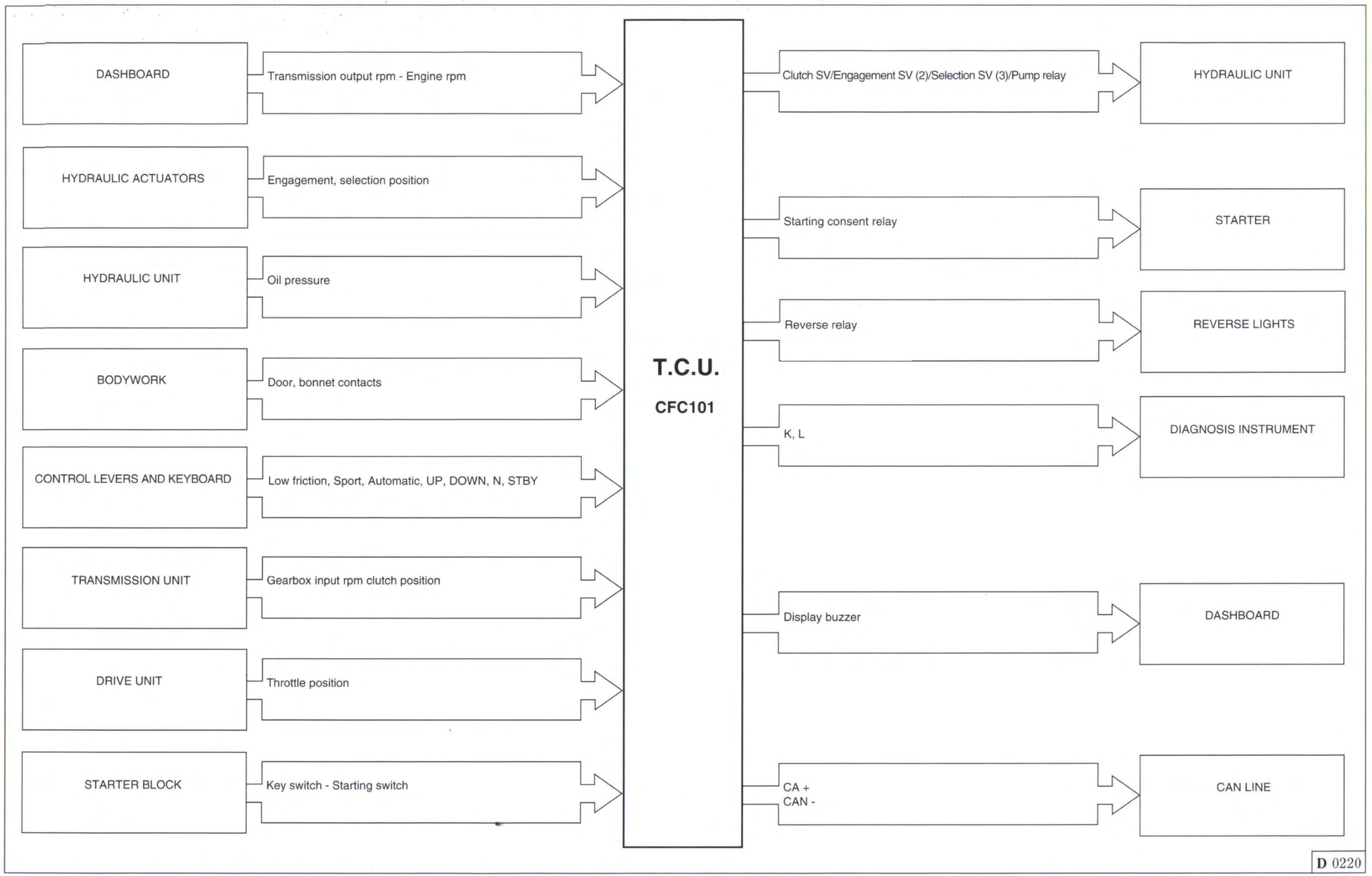

Fig. 8 - Transmission control unit (TCU) and relevant connections to the system.

An electronic control unit (**1**) identifies the driver's requests and evaluates the car operating conditions through a set of sensors; then, it manages automatically the gear shifting, controlling clutch, gearbox and engine torque directly.

During gear shifting, the engine control is interlocked with the gearbox control.

The interface between gearbox and engine control remarkably improves the system performance and relieves the driver from any synchronization request of clutch-accelerator movements during gear shifting; gears can be changed also with fully-depressed accelerator pedal.

The "F1 GEARBOX" manages the transmission upon driver's request and further carries out a drive "tutoring" and aiding action.
As a matter of fact, the system prevents wrong gear shifting requests, avoids involuntary engine switching off and wheel locking in case of low friction. For a better driving, the first gear is always available when the car stops and gears are automatically downshifted in case of a sudden speed decrease, with a subsequent acceleration request.

These features are translated in driving safety improvement, as there are fewer possibilities of wrong manoeuvres by the driver.
The engaged gear is shown on the display inside the instrument panel, while the diagnosis indications are managed by the TCU through a warning light and a buzzer.

1.3. Transmission control unit (TCU)

With reference to the block diagramme in Fig. **8**, the TCU is pre-set to:

- get signals coming from the sensors;

- interface the driver's control device;

- interface the engine ECU;

- control the hydraulic sub-system;

- manage an information display (and a buzzer).

The signals to be sent to the TCU are:

- engine rpm;
- gearbox main shaft speed;

- gearbox layshaft speed;

- clutch actuator position;
- selection actuator position;
- engagement actuator position;
- throttle angle position;
- key in "run" position;
- driver's door switch status;

- brake pedal switch status;

- power unit oil pressure;

- CAN line signals (engine water temperature, engine torque);
- engine hood ON-OFF switch.

The interface to the ECU is managed by a CAN line.

To control the hydraulic sub-system, the TCU comes with:

- output for delivery proportional solenoid valve adjustment, for clutch control;

- output for pressure proportional solenoid valve adjustment, for engagement control;
- outputs for ON-OFF solenoid valve control, for selection control;

- output for electric pump control.

In addition, the TCU sends the enabling for engine starting.

1.4. System operating architecture

Fig. **7** shows the lay-out of all the system parts.
The TCU (**1**) operates as follows:

- it detects the controls given by the driver: two levers behind the steering wheel are used for upshifting (**10**) or downshifting (**11**); a small lever on the central tunnel selects the reverse engagement (**12**); a push button on the central tunnel is used for "automatic" operation mode (**13**); a second push button sets the "low friction" mode (**14**). An ON-OFF switch (**22**) enables the operation in "sport" mode (**for its use, see section "H"**).

- It informs the driver on the system status, through visual and sound messages. The following devices are installed on the car instrument panel (**8**): a display showing the engaged gear, two warning lights signalling the "automatic" and "low friction" operation

modes and a third warning light for possible failures in the system; a buzzer (**9**) signals operation failures or incorrect manoeuvres by the driver. The "sport" mode is signalled by a warning light on the dashboard, common to the electronic suspension system.

- It controls the hydraulic actuators: the controls sent by the ECU are driven by a hydraulic system formed by a generation and control unit (Power Unit) (**2**) and actuators for gear engagement and selection (**4**) and for clutch movement (**5**).

- It detects the position of the three hydraulic actuators: a position sensor is installed on each hydraulic actuator for gearbox and clutch control; an electronic module interfaces the sensor and the ECU (**7**), for reading the clutch thrust bearing position.

- It detects the engine speed and the gearbox output speed, through signals on the instrument panel. It detects the gearbox inlet speed through a sensor (Fig. **22**).

- It detects the throttle angle position (**16**), the intervention on the brake (**15**), the engine hood (**21**) and driver's side door (**20**) opening, through suitable sensors and switches.

- It interfaces the engine monitoring system. This interface is an extremely

important connection, considering that, during gear-shifting, the EMS (Engine Monitoring System) becomes a torque generator interlocked with the gearbox. In addition, the EMS can supply some useful signals to the gearbox system, to prevent the sensors on the car from being doubled.

1.5. Hydraulic interlocking

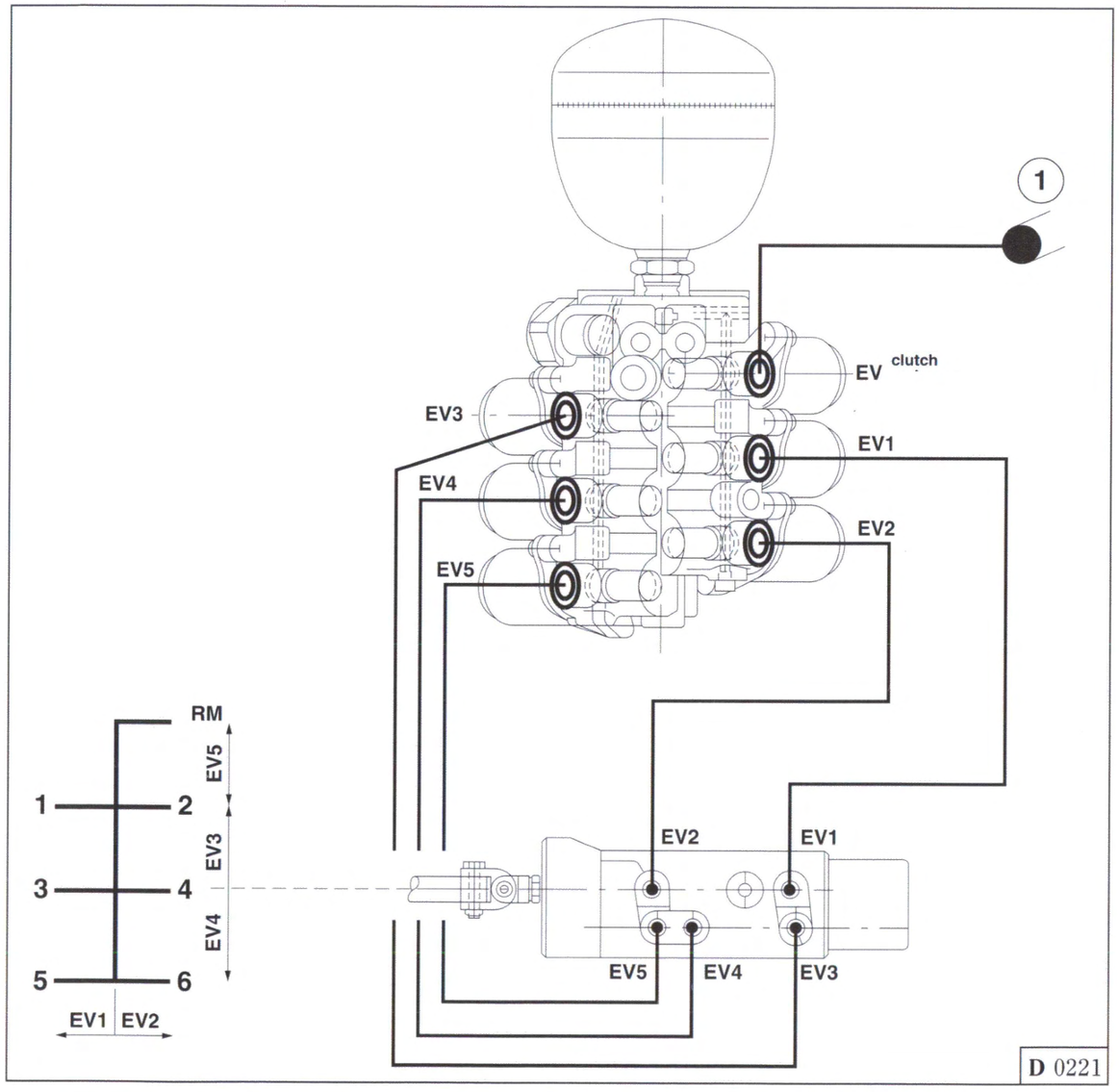

Gear	EV1	EV2	EV3	EV4	EV5
1	•		•		•
2		•	•		•
3	•		•	•	•
4		•	•	•	•
5	•			•	•
6		•		•	•
RM		•	•		

•	EV1 - EV2	EV3 - EV4 - EV5
"ON" solenoid valve	Engagement solenoid valves	Selection solenoid valves

EV	Black
EV1	Grey
EV2	Blue
EV3	Blue
EV4	Black
EV5	Grey

Fig. 9 - Sketch of the connecting lines between Power Unit and actuators
1 - Clutch actuator.

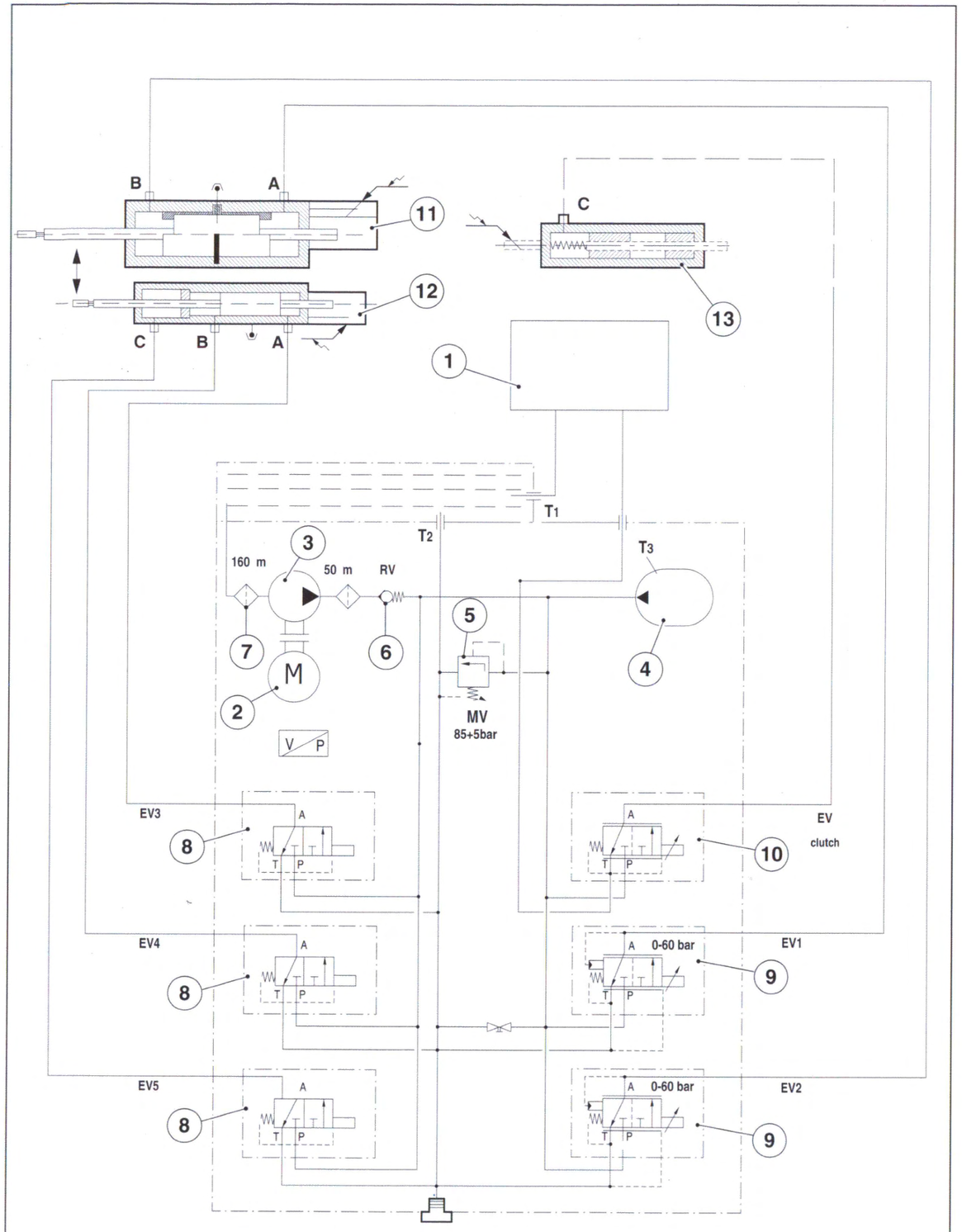

D 0222

Fig. 10 - Hydraulic scheme

1 - Oil tank;
2 - Pump control motor;
3 - System supply pump;
4 - Hydraulic accumulator;
5 - Max. pressure valve;
6 - Check valve;
7 - Oil filter;
8 - ON solenoid valves;
9 - Delivery proportional solenoid valve for clutch control;
10 - Pressure proportional solenoid valves for gear engagement;
11 - Gear engagement actuator;
12 - Gear selection actuator;
13 - Clutch control actuator.

The gearbox and clutch movement with gear selection and engagement is carried out through a hydraulic system summarized in figures **9** and **10**.

The table shows the sketch of the solenoid valves concerned with the engagement of the different gears.
The colours of the connectors (shown in fig. **10**) are approximate.

On the Power Unit body, next to the line connection, the following initials are printed: EVF (clutch solenoid valve), EV1, EV2, EV3, EV4, EV5 (solenoid valve 1-2-3-4-5); the same initials, apart from EVF, are printed on reference clamps placed on the harness.

The main hydraulic parts are subdivided in two units (Fig. **11**):
– the Power Unit (**1**);
– the actuator unit (**2**) installed on the gearbox housing.

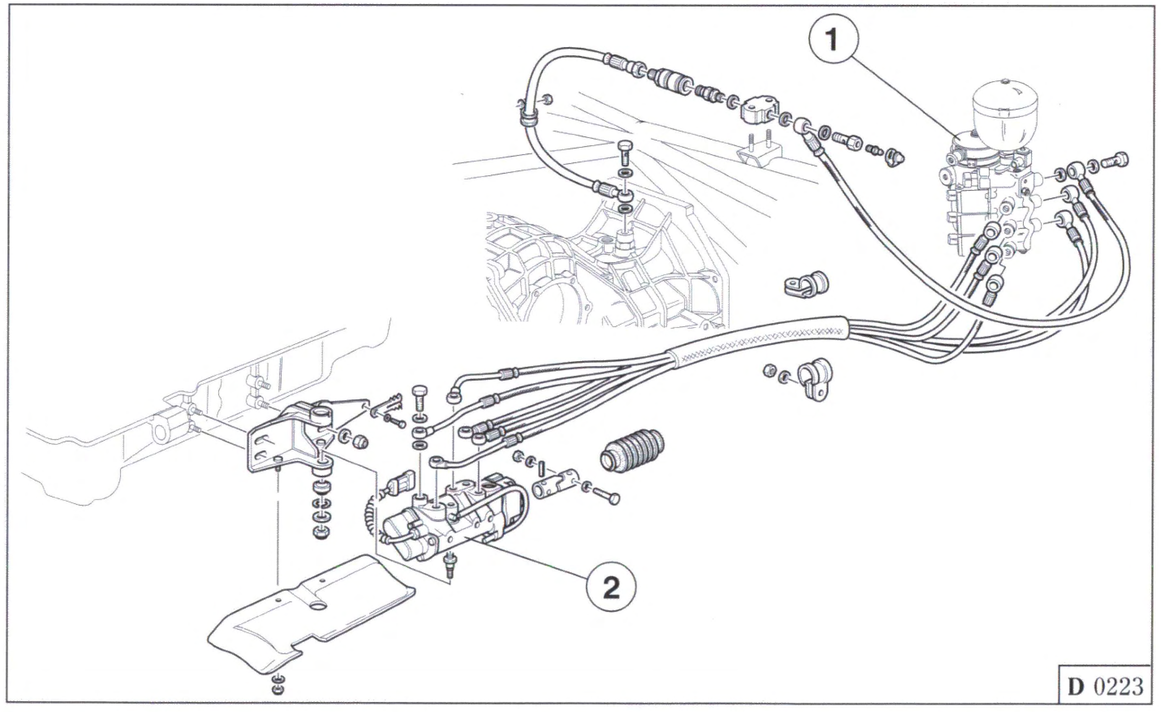

Fig. 11 - Assembly arrangement of parts and connecting lines.

In addition to the parts in Fig. **11**, the following parts are installed: an annular actuator for clutch control, an oil collecting tank and a set of lines for hydraulic pressure use, connecting the Power Unit to the gearbox and clutch actuators, as shown in Fig. **12**.

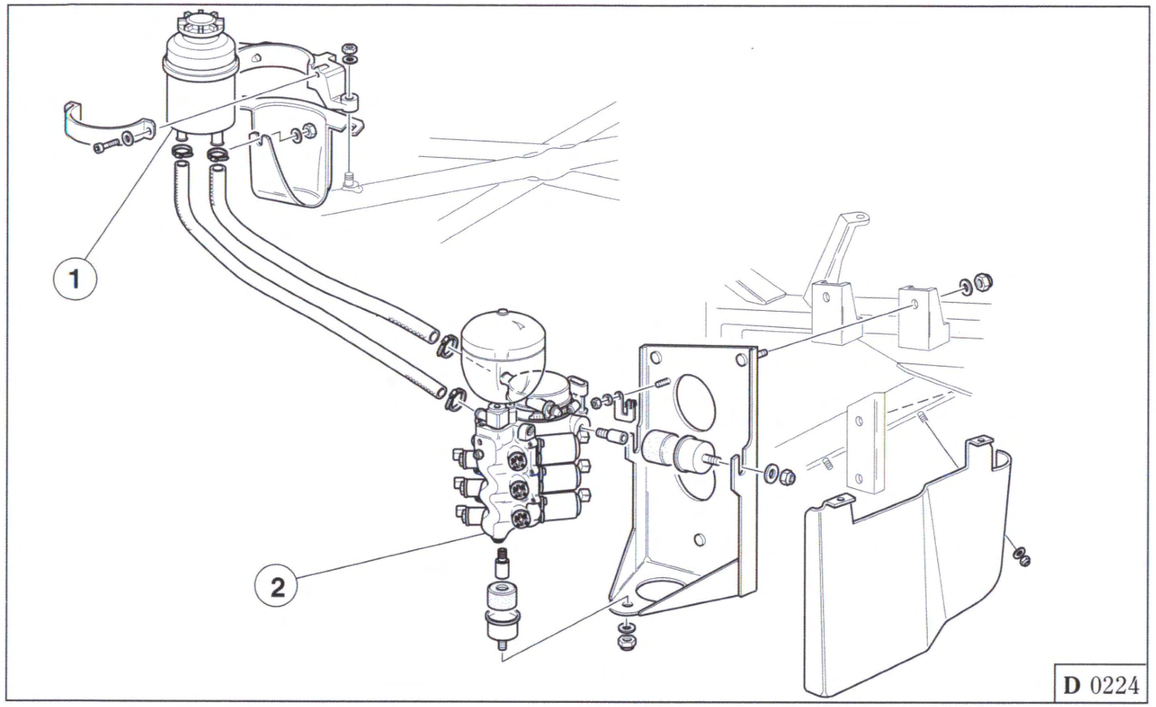

Fig. 12 - Assembly arrangement of parts and connecting lines

1 - Oil tank
2 - Power Unit.

Caution!
Any damage to the lines (e.g. after an accident) that could take some dirt inside the system involves the requirement of replacing the Power Unit / actuator and relevant line assembly (single assembly).

2. System parts

2.1. Power Unit

The Power Unit is formed by the following basic parts:

- the motor driving the supply pump;

- the oil pump feeding the circuit;

- the check valve that prevents the accumulator discharge when the pump isn't operating;
- the hydraulic accumulator;
- the line pressure sensor;
- a delivery proportional solenoid valve for clutch control;

- two pressure proportional solenoid valves for gear engagement;

- three ON-OFF solenoid valves for selection control.

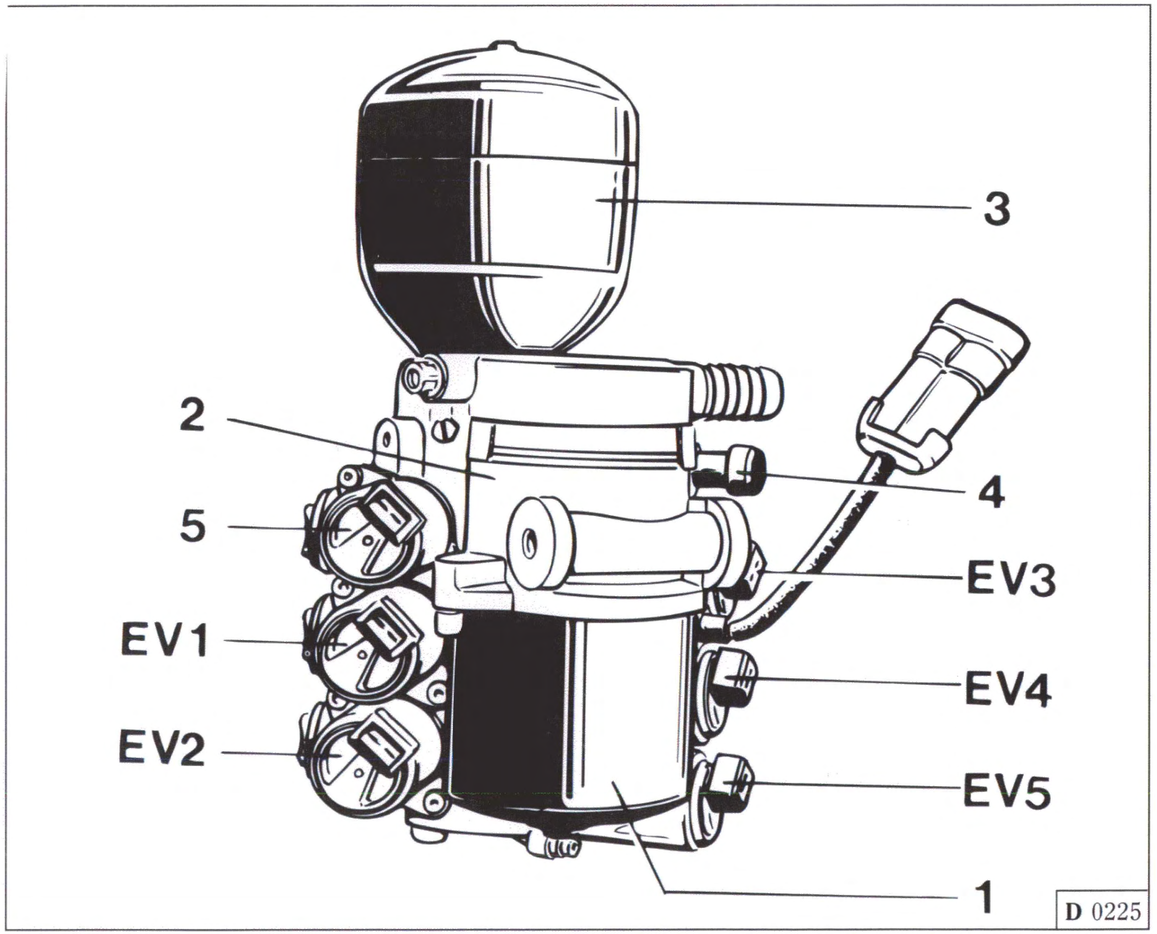

Fig. 13 - Power Unit and relevant basic parts

1 - Pump control motor;
2 - System supply pump;
3 - Hydraulic accumulator;
4 - Pressure sensor;
5 - Clutch control solenoid valve.
EV1 - Engagement solenoid valve;
EV2 - Engagement solenoid valve;
EV3 - Selection solenoid valve;
EV4 - Selection solenoid valve;
EV5 - Selection solenoid valve.

2.2. Actuator unit

The actuator unit includes the following basic parts (Fig. **14**):

- the engagement actuator controlling gear engagement and release, with a linear movement;
- the selection actuator that controls the selection, with a rotary movement;

- two position sensors of the actuator.

The engagement actuator is a double-effect one, with three stable positions, mechanically-set; the selection actuator is double-effect type, with four stable positions, mechanically-set.

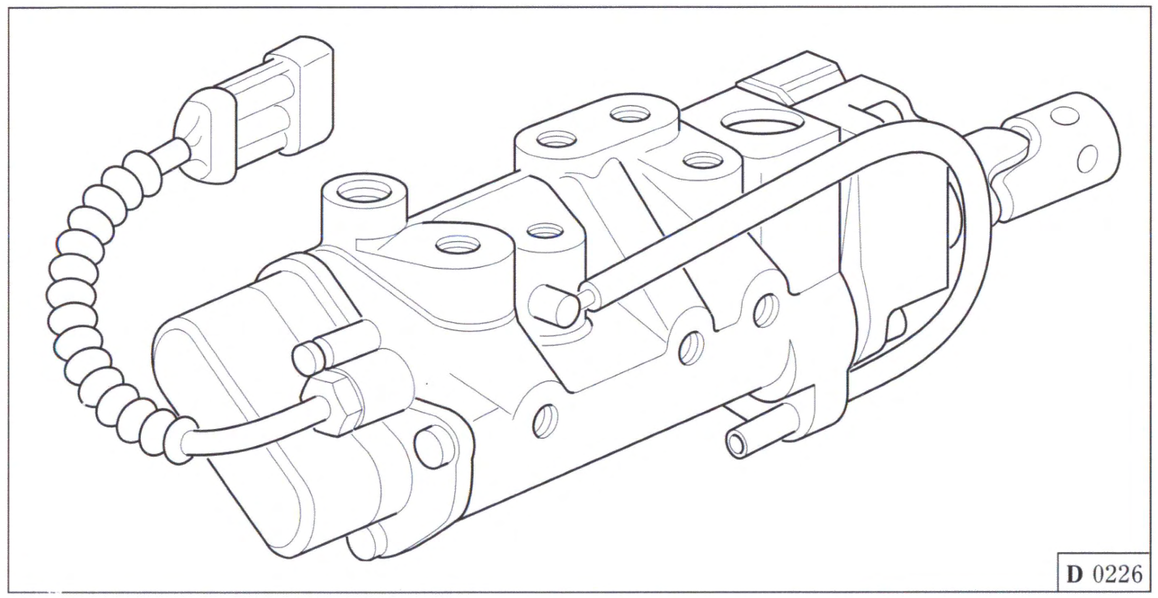

Fig. 14 - Actuator unit for gear selection and engagement.

2.3. Clutch control actuator

For clutch control, the system uses a hydraulic actuator like those on cars with standard mechanical transmission.

The ring actuator is supplied with a position sensor, connected to the TCU.

Note: the line that connects the clutch actuator to the Power Unit is supplied with a fast coupling (Fig. **15**); in case of a severe failure to the system - with closed clutch and engaged gear - the clutch can open by connecting the suitable hand pump to the fast coupling.

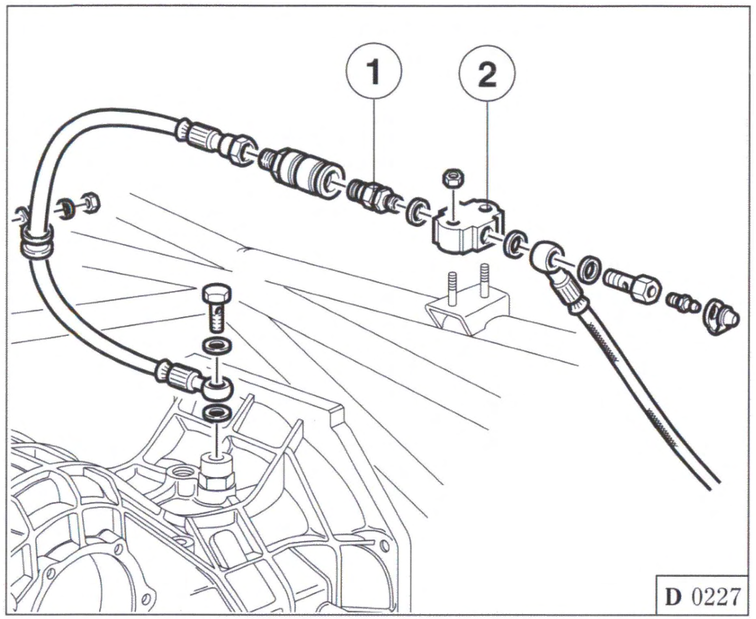

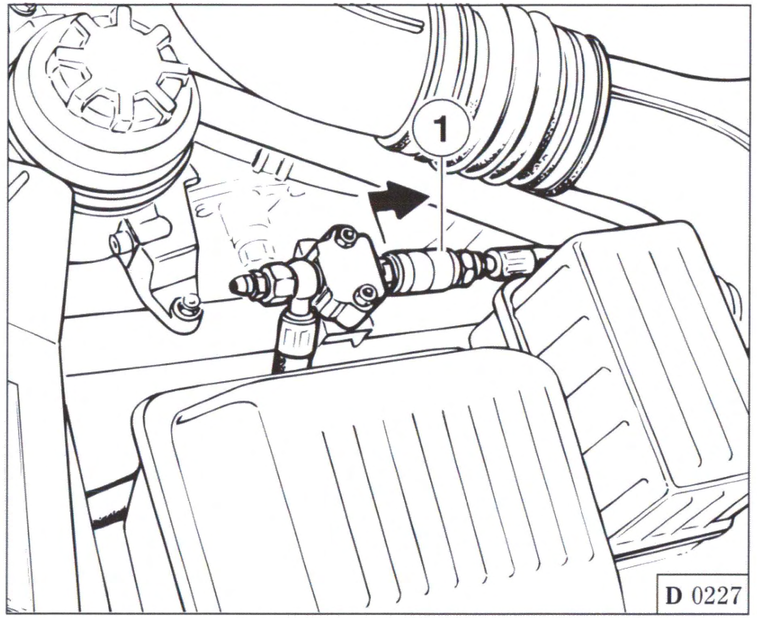

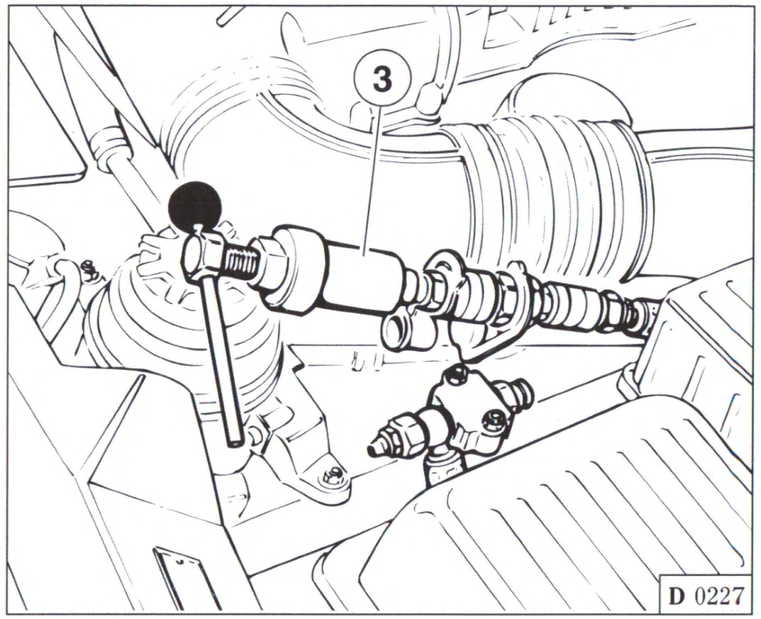

Fig. 15 - Detail of the fast coupling for clutch release

1 - Fast coupling; **2** - Fastening base; **3** - Clutch opening manual pump.

2.4. Measuring sensors

The TCU detects the sizes required for transmission check, through a set of sensors installed on the car and through the communication line with the engine ECU.

The TCU interfaces all the sensors and actuators through a dedicated harness (Fig. **16**).

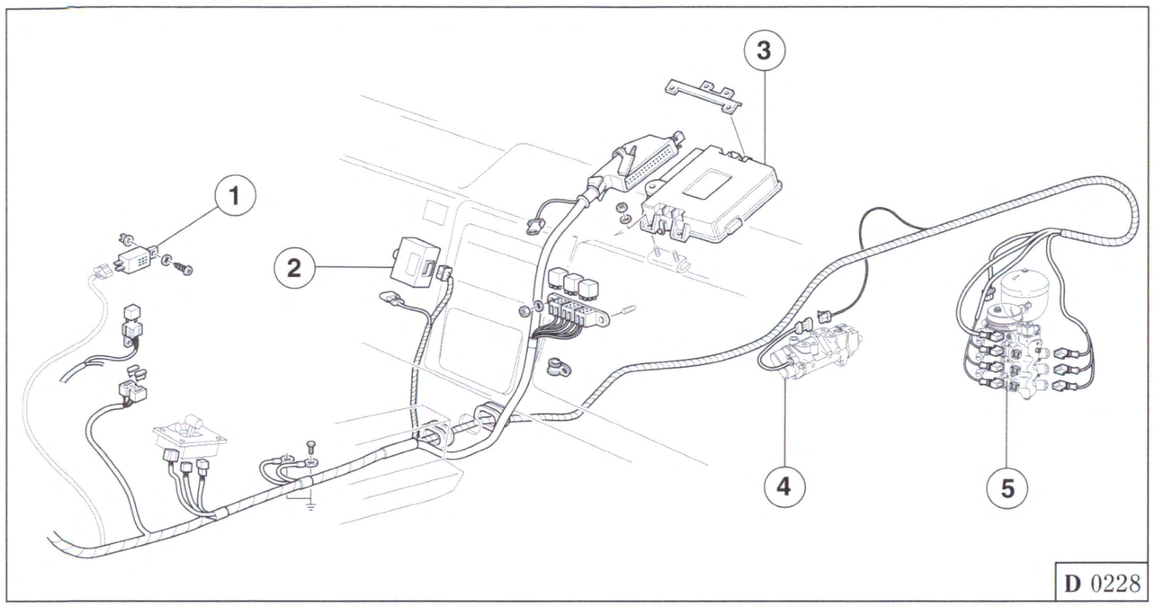

Fig. 16 - TCU harness

1 - Buzzer; **2** - Clutch position sensor control module; **3** - TCU; **4** - Gear engagement/selection actuator; **5** - Power Unit.

The installed sensors are:

2.4.1. Accelerator pedal potentiometer

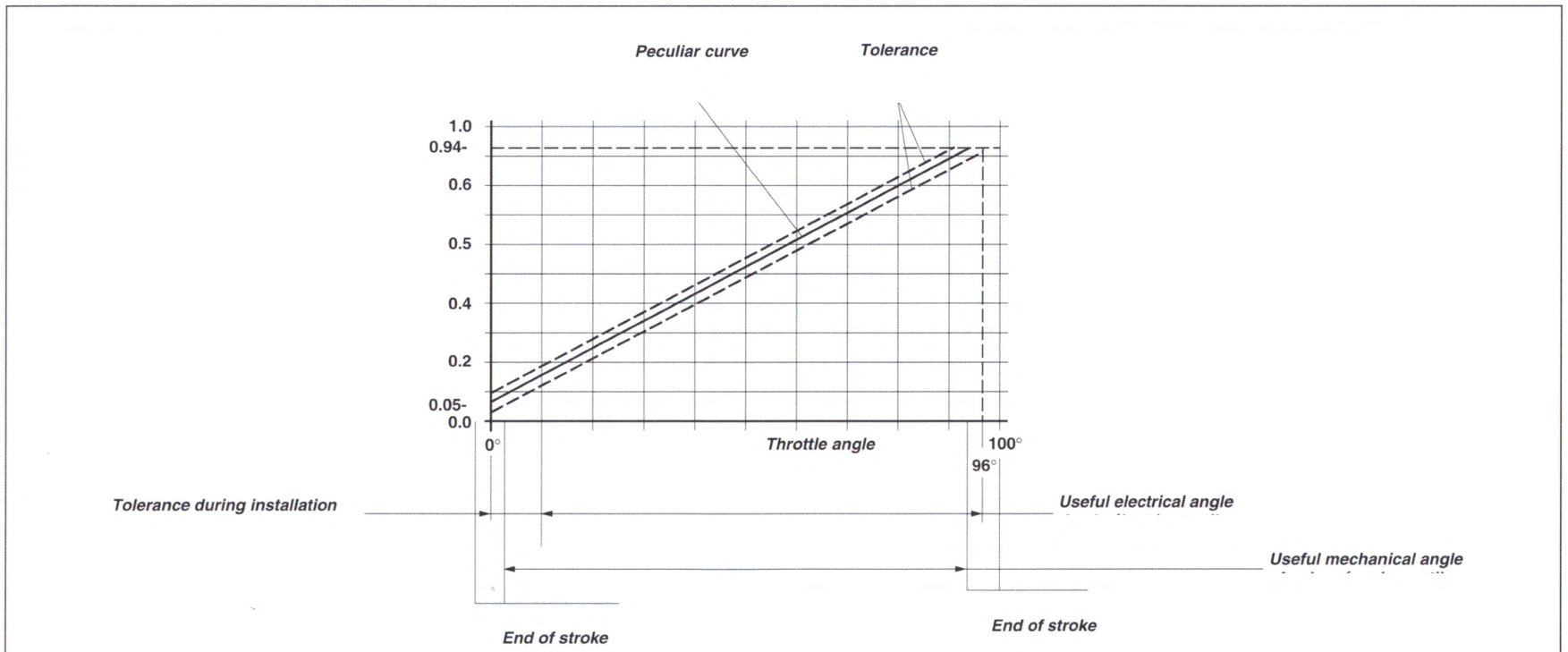

Fig. 17 - Accelerator pedal potentiometer peculiar curve.

The system uses one of the two races of the throttle position sensor - pointer-type -, belonging to the engine control system and installed on the throttle body.

2.4.2. Gear selection position sensor

This sensor is installed inside the gear engagement and selection actuator (see Fig. **14**) and detects the position of the enabling piston for gear selection; due to its position, the sensor cannot be disassembled, but a diagnosis can be made on it through the connector shown in Fig. **18**; the wires for the supply and reading of the above connector and of the gear engagement position sensor merge in this connector.

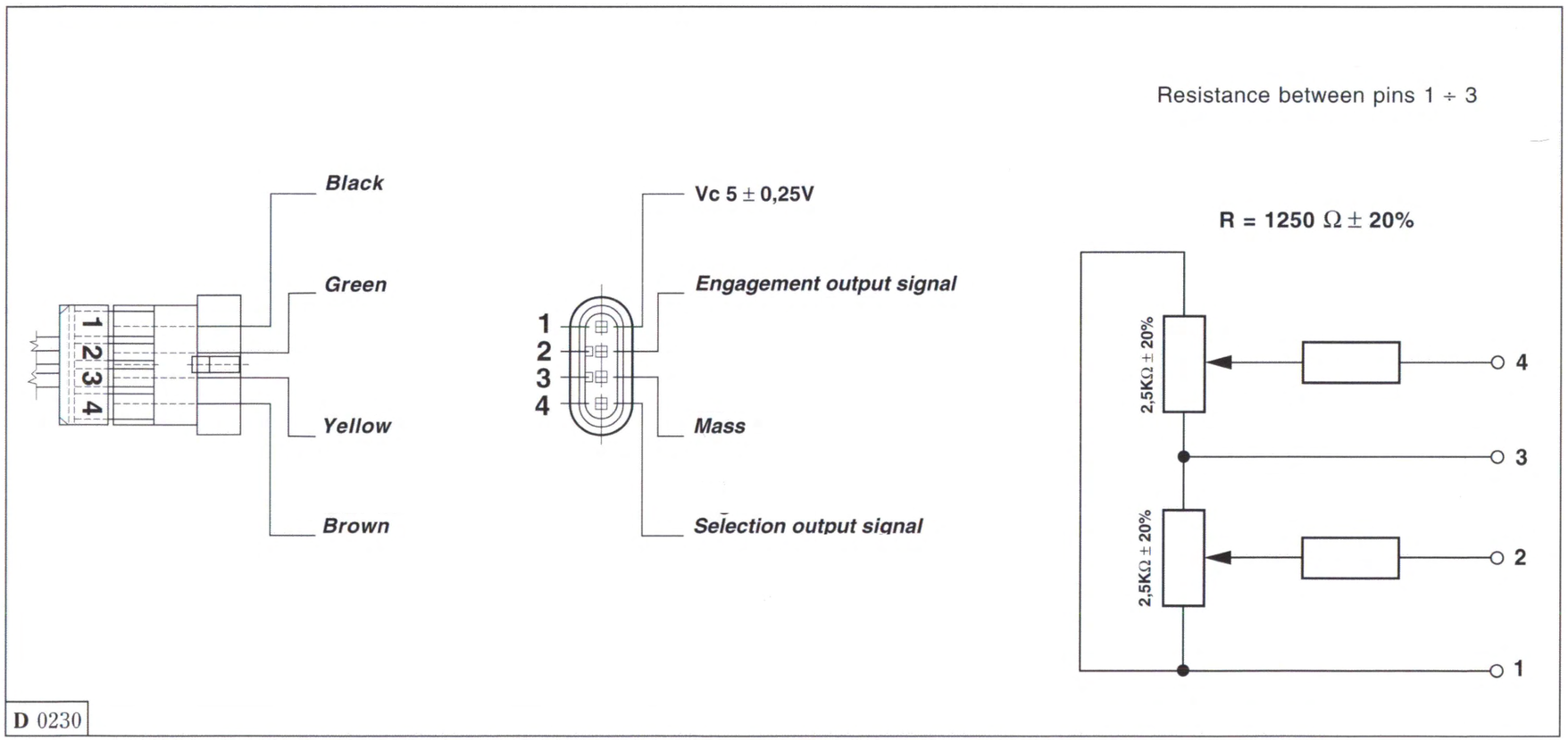

Fig. 18 - Gear selection/engagement position sensor connector, with relevant wiring diagramme.

2.4.3. Gear engagement position sensor

This sensor is installed on the actuator and detects the position of the enabling piston for gear engagement. It cannot be disassembled, but its diagnosis can be made through the connector shown in Fig. **18**.

2.4.4. Clutch position sensor and control unit

To detect the position of the clutch thrust bearing an LVDT sensor (Linear variation differential transformen) (Fig. **19**) is installed in the system. The signals produced by the sensor are transmitted to a suitable control unit (Fig. **20**) that processes them and powers the sensor itself.

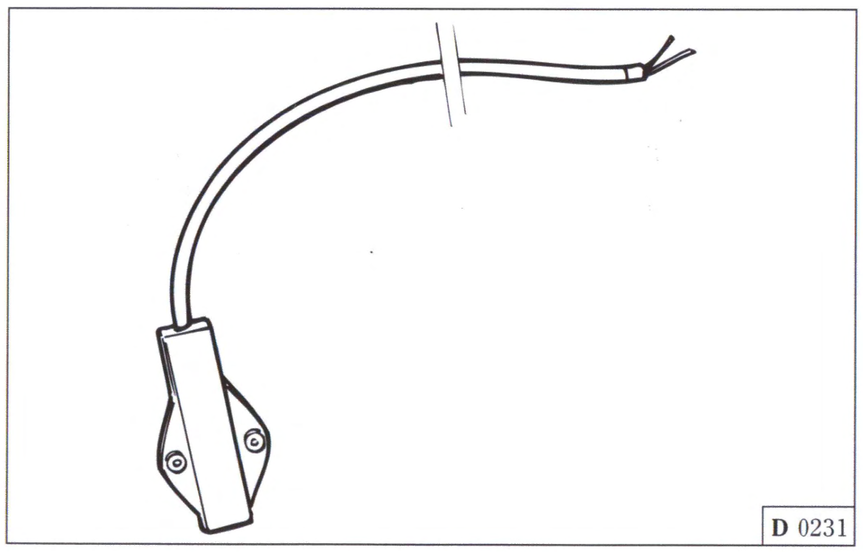

Fig. 19 - Clutch position sensor.

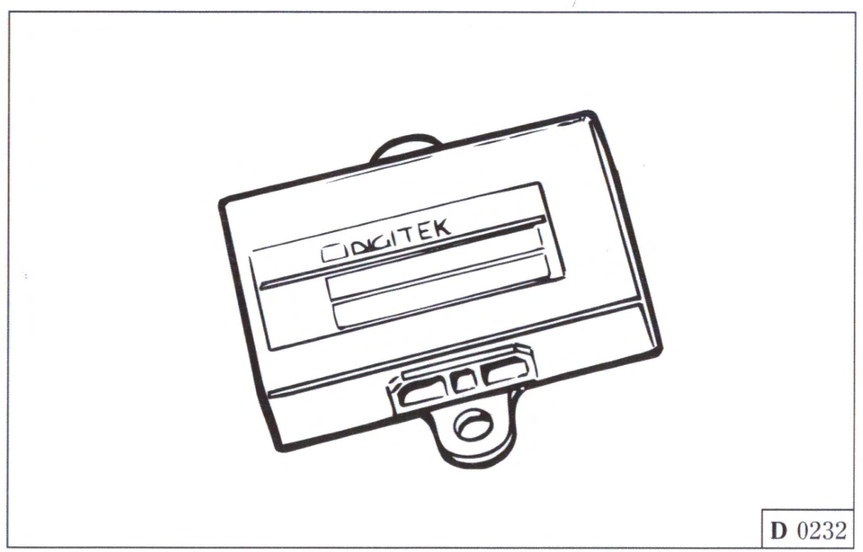

Fig. 20 - Control unit for clutch position sensor.

Fig. **21** shows the details of the connecting wiring diagramme of the transducer and of the control unit.

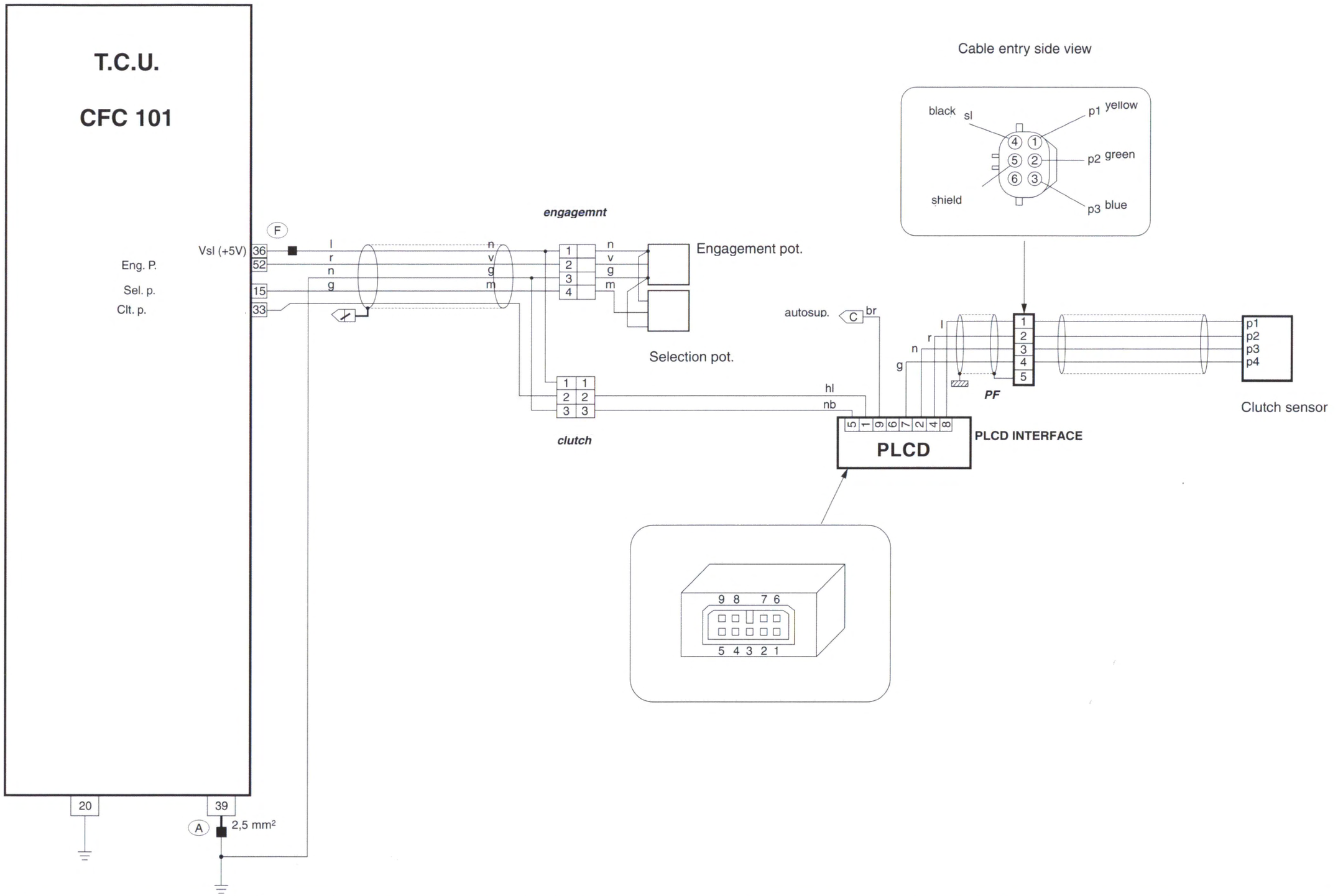

Fig. 21 - Electrical connection between clutch position transducer and PLCD control unit.

2.4.5. Gearbox input shaft revolution sensor

The variable reluctance sensor (Fig. **22**) is installed on the gearbox oil sump (Fig. **23**); to disassemble it, it should be emptied.

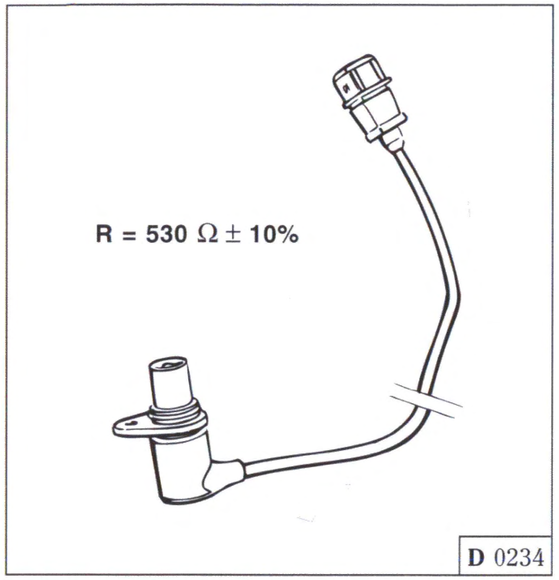

Fig. 22 - Gearbox shaft revolution sensor.

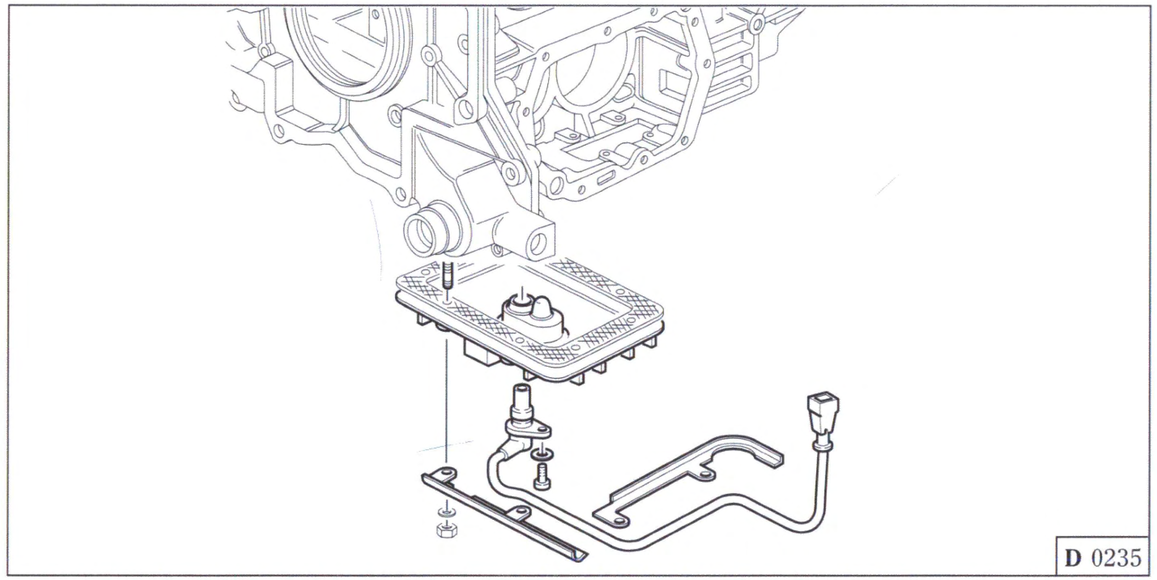

Fig. 23 - Detail of gearbox shaft revolution sensor position.

2.4.6. Hydraulic circuit pressure sensor (on the Power Unit)

Re. **4** in Fig. **13**

Technical features

Pressure range : 0 ÷ 80 bar
Response tension : 0.5 ÷ 4.5 volt
Supply : 5 V dc

2.4.7. Car speed sensor

The car speed signal is generated by a Hall effect sensor, placed on the gearbox layshaft.

The generated wave shape is filtered, squared and halved in frequency by the instrument panel (with range 0÷12 volt) and sent to the utilization points (Fig. **24**).

2.4.8. Engine rotation speed sensor

The engine revolution signal is generated by the engine Motronic 5.2 ECU (square wave with duty cycle 50% and range 0÷12 volt) and it is sent simultaneously, through a shunt of the electric harness, to the control panel and to the TCU (Fig. **25**).

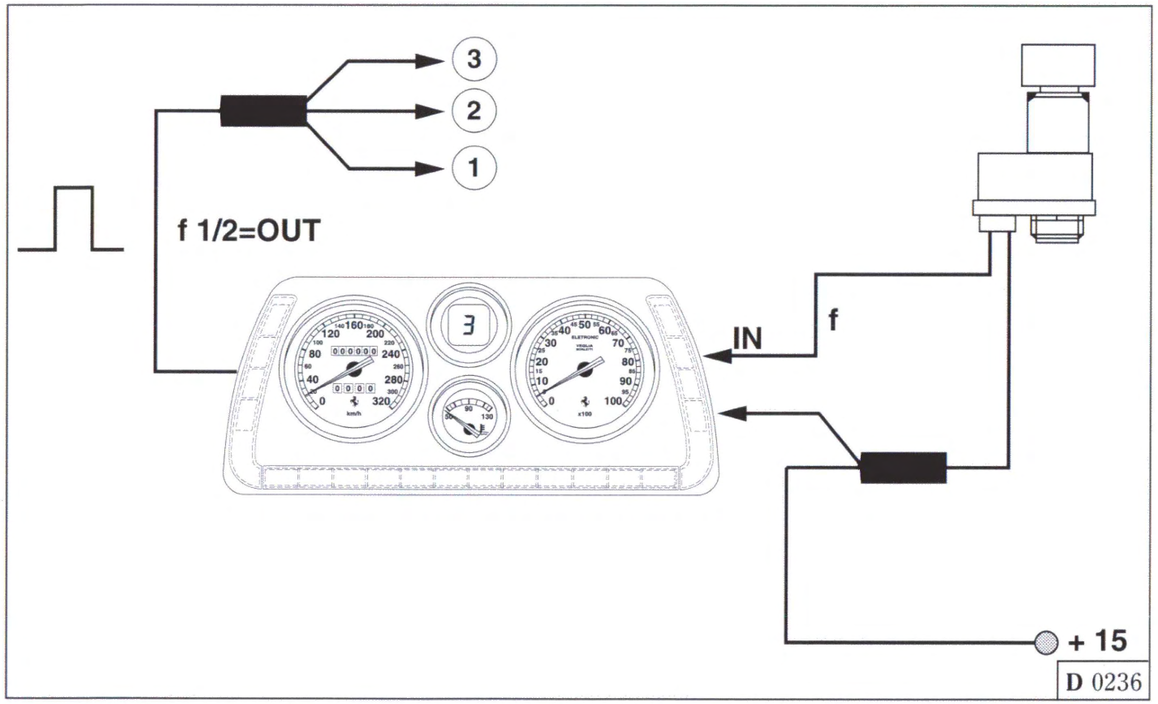

Fig. 24 - Use of the car speed sensor signal

1 - F1 TCU;
2 - Motronic 5.2 ECU;
3 - Suspension ECU.

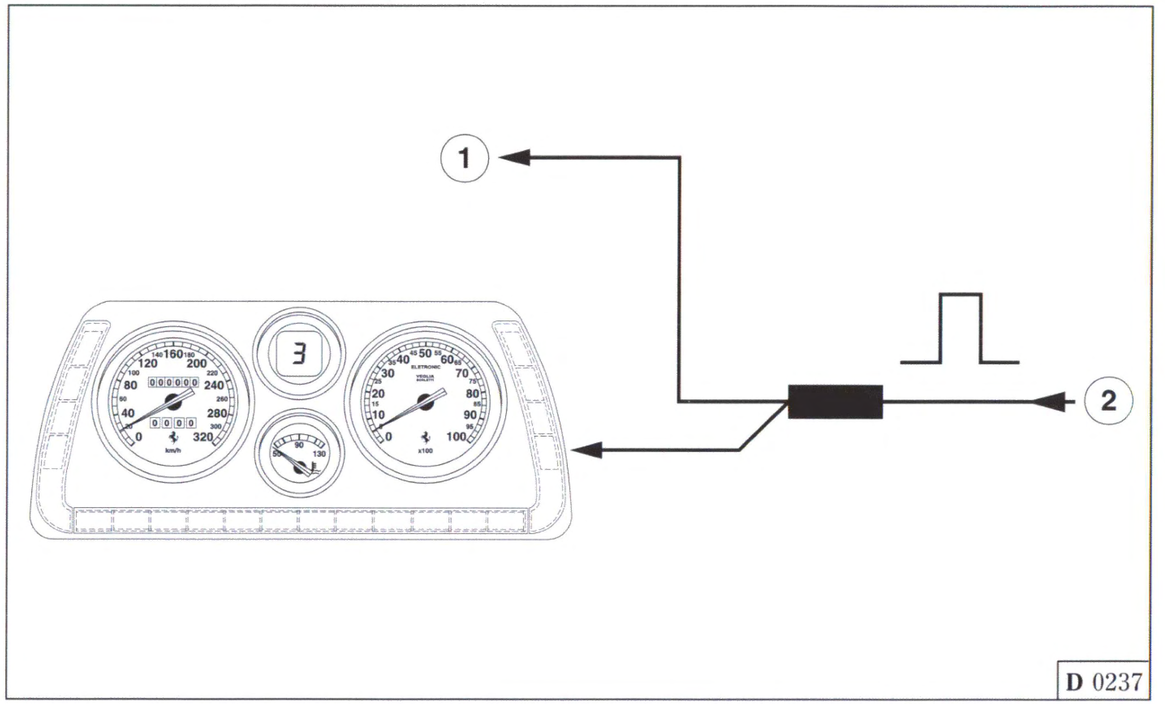

Fig. 25 - Use of the engine rotation speed signal

1 - F1 TCU;
2 - Motronic 5.2 ECU;

2.4.9. Driver's side door opening switch

The information of "driver's side door open" is sent simultaneously to the TCU and to the alarm system ECU, through an ON-OFF switch that closes the circuit to ground.

If this occurs when the car is at a standstill and the engine is running, a gear is engaged and neither the accelerator nor the brake pedals are pressed, the system enables the buzzer and releases the gear, passing to Neutral.

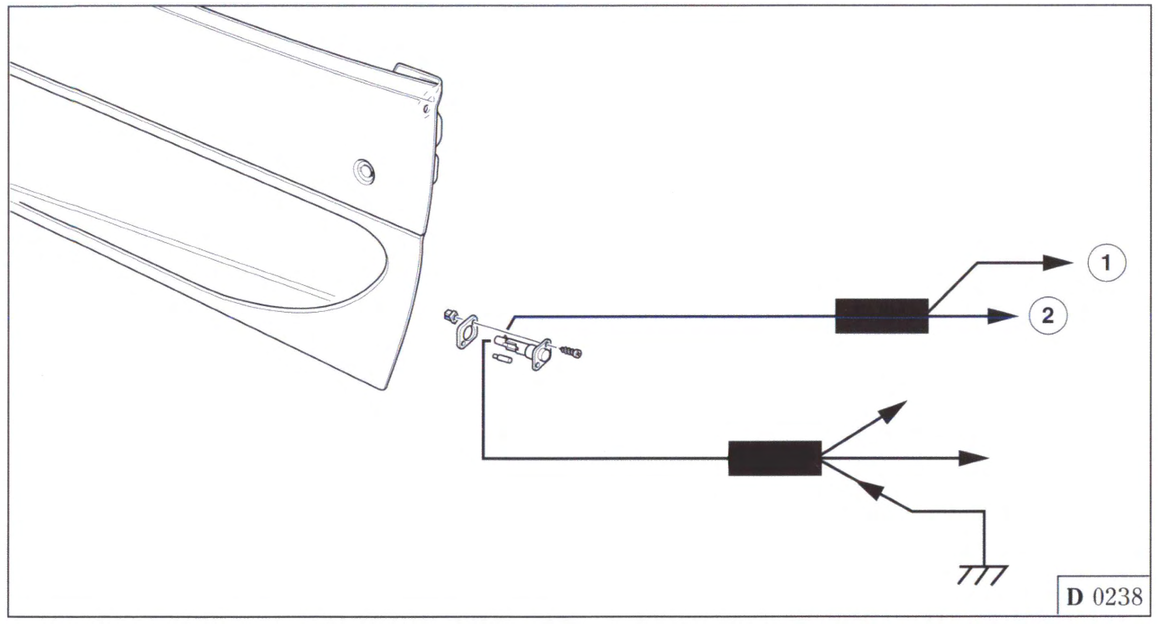

Fig. 26 - Door opening switch scheme
1 - Alarm system ECU;
2 - F1 TCU.

2.4.10. Engine hood switch

The information of "engine hood open" is sent simultaneously to the TCU and to the alarm system ECU, through an ON-OFF switch that closes the circuit to ground.

If this occurs when the car is at a standstill, the engine is running and a gear is engaged, the system enables the buzzer and releases the gear, passing to Neutral.

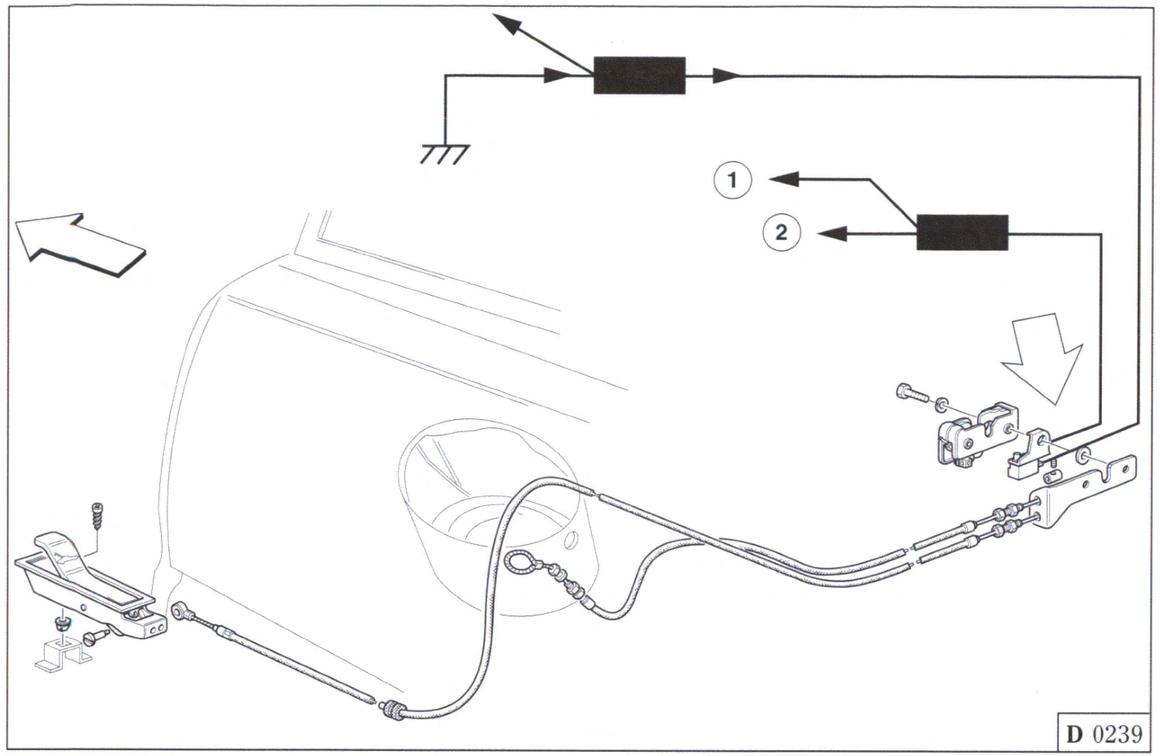

Fig. 27 - Engine hood switch scheme
1 - Alarm system ECU;
2 - F1 TCU.

2.5. Driver's controls

The driver controls the gear shifting through two levers, connected to the "Down-Up-Stby" switches, as shown in the drawing (Fig. **27**).

The lever on the left of the steering wheel engages a lower ratio, the lever on the right a higher ratio, operating both levers the neutral is engaged.

The system has also two push buttons and a switch to enter the "automatic", "low friction" and "sport" operation modes; the push buttons and the switch are placed in the tunnel, with the lever for reverse (Fig. **28**).

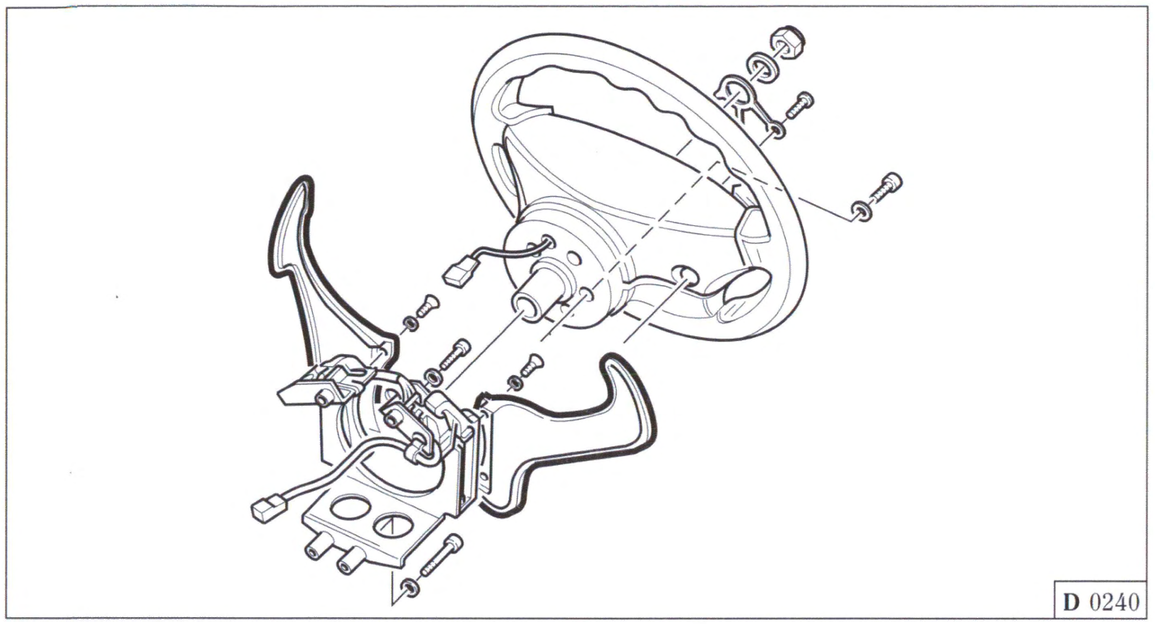

Fig. 28 - Gear shifting levers.

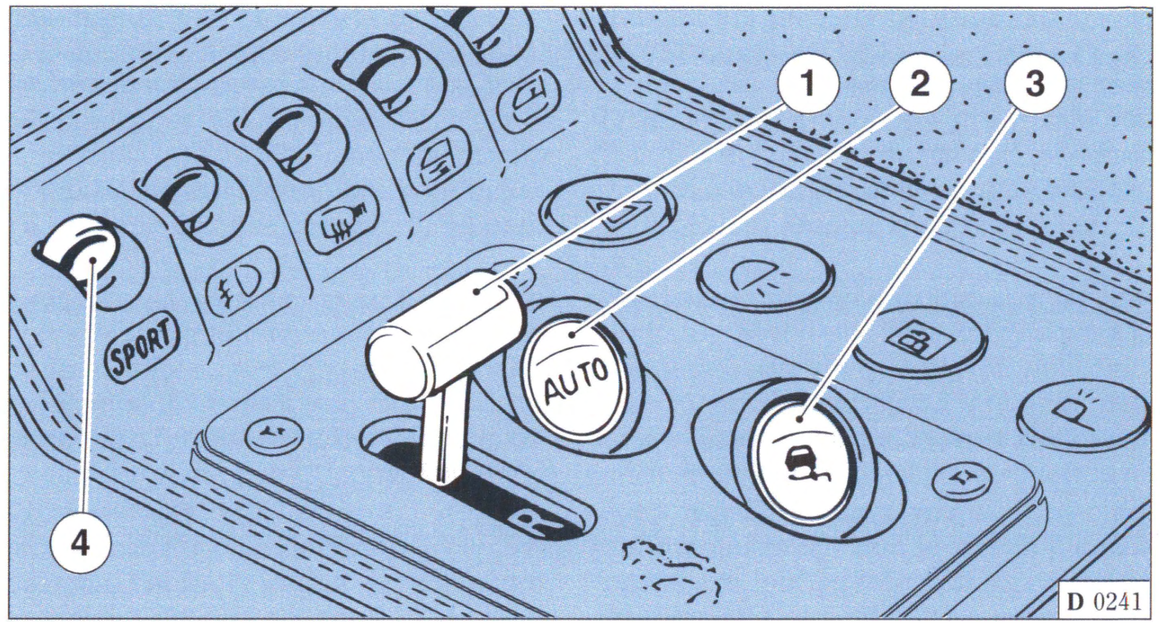

Fig. 29 - Push buttons, switch and reverse lever
1 - Reverse lever; **2** - "Automatic" push button; **3** - "Low friction" push button; **4** - "Sport" push button.

2.6. Display and buzzer

The operating conditions of the system are transmitted to the driver through a display and some warning lights on the instrument panel (Fig. **30**).

The display in the middle of the instrument panel shows the engaged gear and four warning lights describe the system status: "automatic", "low friction", "sport" and "failure" modes.

The warning lights are operated by the display, that receives information from the TCU through a serial line (see pin-out display), apart from the "sport" warning light that is directly operated by the switch.

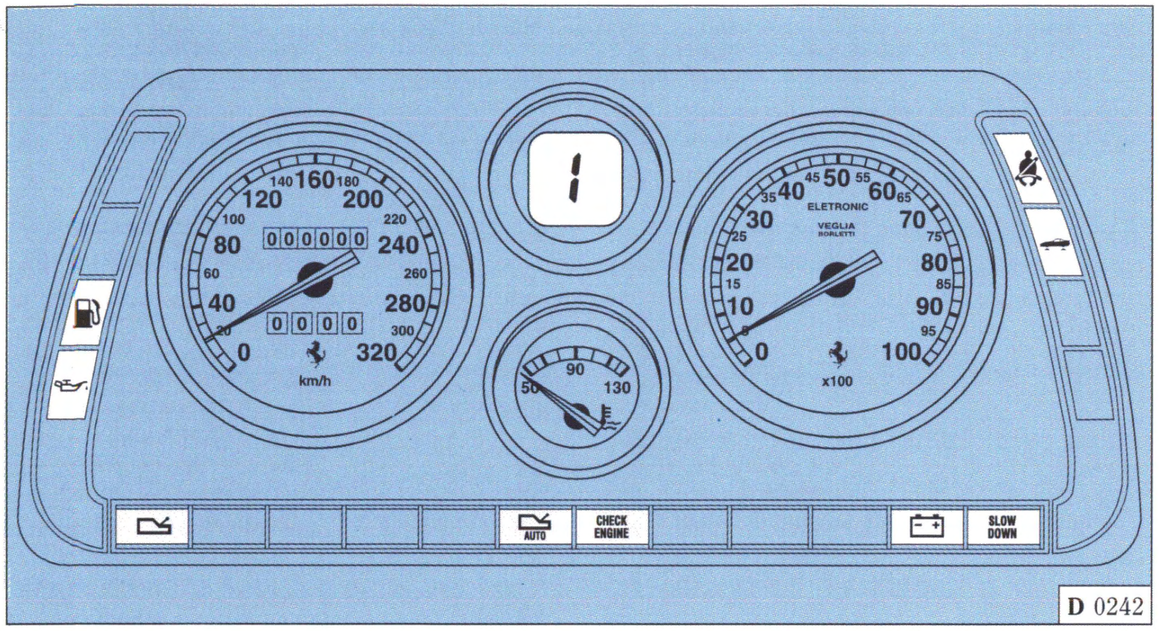

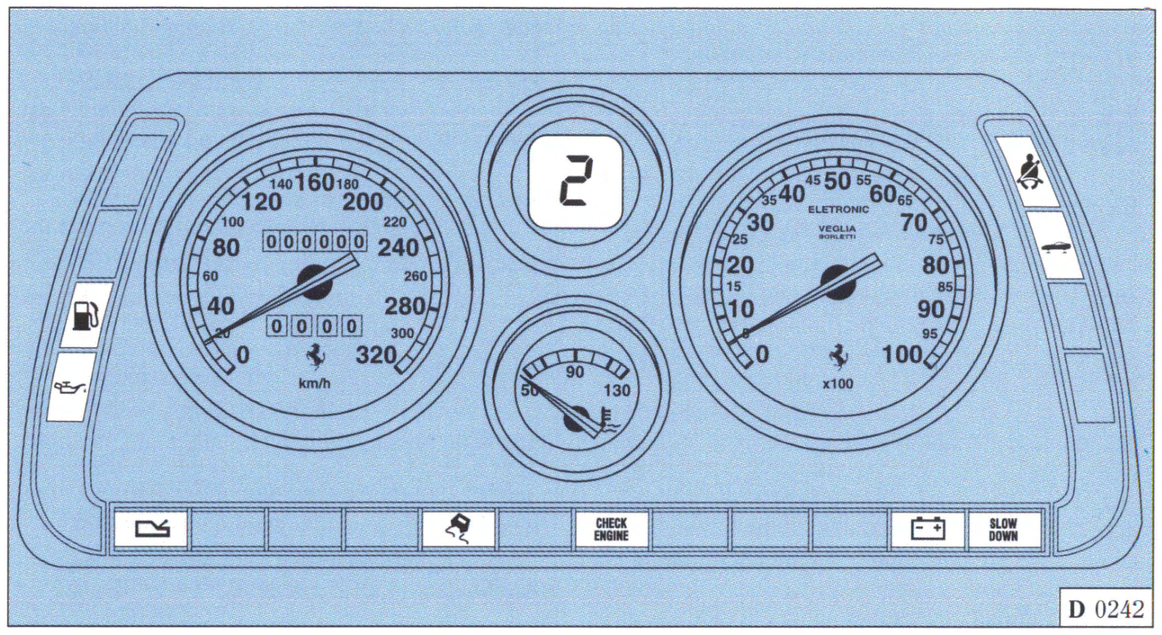

Fig. 30 - Instrument panel with display for gears and warning lights.

2.6.1. Buzzer

Possible incorrect uses of the system or operation failures can be signalled by a buzzer (e.g. clutch over-temperature).

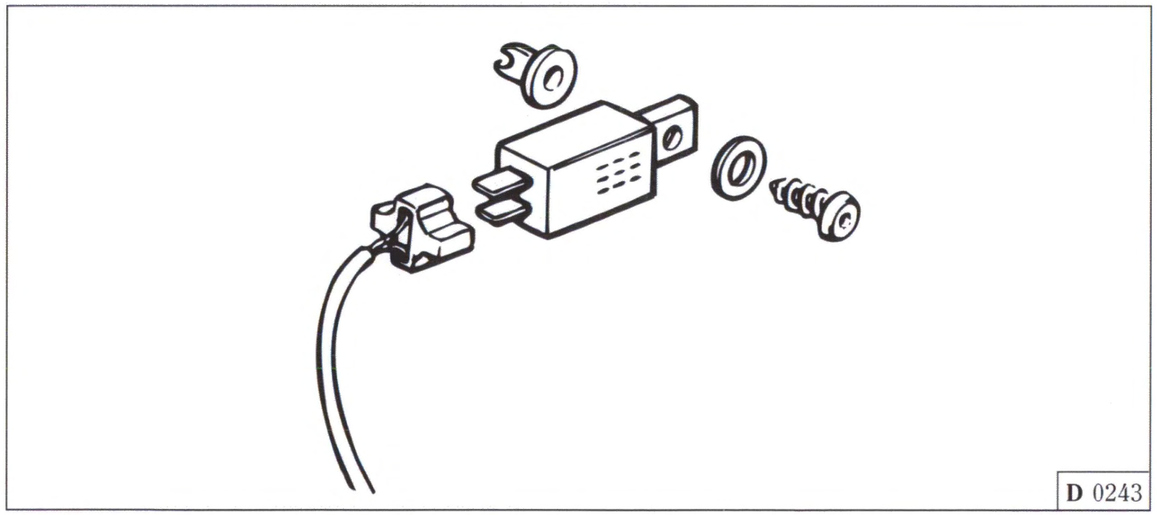

Fig. 31 - Buzzer.

2.7. TCU pin-out

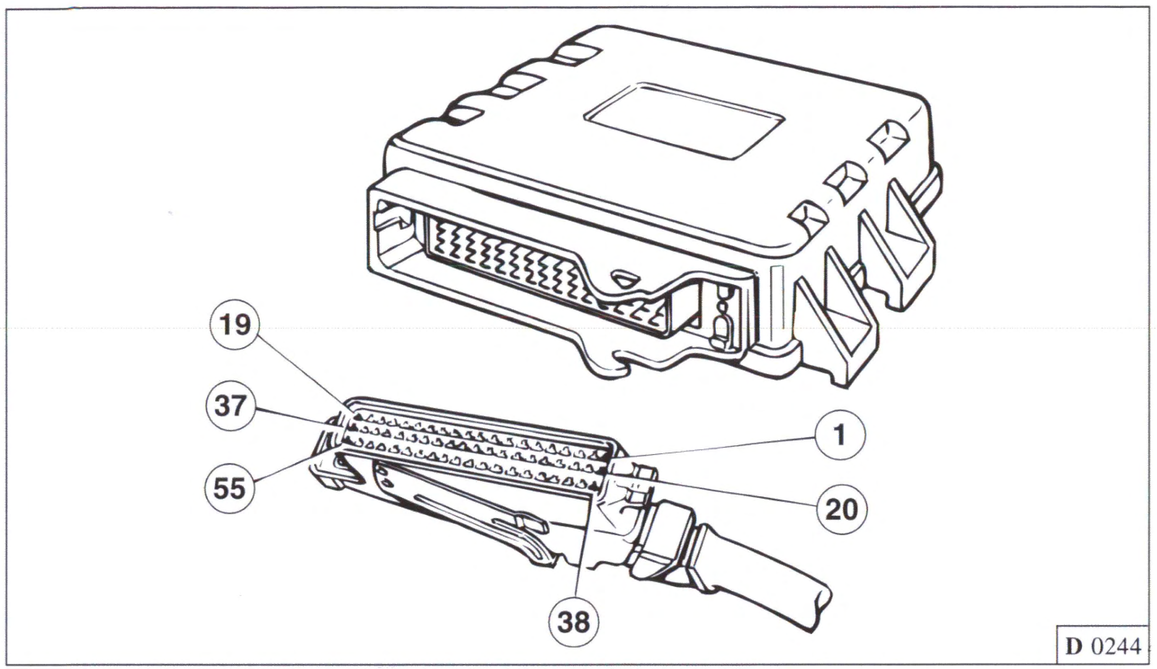

Fig. 32 - 55-way connector.

I :	Input	
M :	Ground	
O :	Output	
IO :		Bi-direction input/output
AL :	supply	
AN :	analog	
DI :	Digital	
FR :	frequency	

Pin	Description	Type
1	Supply voltage (from relay)	**I - AL**
2	Clutch solenoid valve control	**O - DI**
3	EV2 control - even gear engagements	**O - DI**
4	Brake pedal switch	**I - DI**
5	“Sport” switch	**I - FR**
9	High speed line (-)	**IO - FR**
10	Reverse light relay control	**O - DI**
11	EV4 control - selection 1	**O - DI**
12	EV5 control - selection 3	**O - DI**
13	Gearbox input pick-up (+)	**I - FR**
14	Diagnosis systems and Scan-Tool (L) serial line	**IO - FR**
15	Selection actuator position potentiometer	**I - AN**
16	Gear selection device (Up)	**I - AN**
17	Gear selection device (Stand-by)	**I - AN**

18	5 V output for pressure sensor supply	**O - AL**
19	Sensor ground (not connected)	**M - AN**
20	TCU ground	**M - AL**
21	EV1 control - odd gear engagement	**O - DI**
22	Driver's door switch	**I - DI**
23	"Low friction" push button	**I - DI**
24	Open hood switch	**I - FR**
25	Serial line for gear display	**O - FR**
27	Starting in process (key-operated)	**I - DI**
28	High speed serial line (+)	**IO - FR**
29	EV3 control - selection 2	**O - DI**
30	Starter relay enabling	**O - DI**
31	Gearbox output revolution signal from speedometer	**I - FR**
32	Gearbox input revolution pick-up (-)	**I - FR**
33	Clutch actuator position (from PLCD interface)	**I - AN**
34	Throttle potentiometer (second race)	**I - AN**
35	Reverse switch	**I - AN**
36	5 V output for sensors (engagement and selection potentiometers)	**O - AL**
37	Ground (not connected)	**M - AN**
38	Shielded cable braid	**M - AL**
39	TCU ground (2nd pin for safety)	**M - AL**
41	"Automatic" push button	**I - DI**
43	Buzzer output	**O - FR**
47	Self-supply relay control	**O - DI**
48	Pump relay control	**O - DI**
49	Engine rpm signal from revolution counter	**I - FR**
50	Diagnosis system and Scan-Tool (K) serial line	**IO - FR**
51	Pressure linear sensor	**I - AN**
52	Engagement actuator potentiometer	**I - AN**
53	Gear selection device (Down)	**I - AN**
55	"ON" key and ECU supply signal input	**I - DI**

3. System functions

The functions managed by the system are subdivided in two main parts:

- technical functions;
- safety functions.

3.1. Technical functions

The technical functions managed by the system are seven:

3.1.1. Hydraulic power generating unit control

The hydraulic power supply electric pump is managed by an ON-OFF control system: the pump enabling occurs when the pressure is ≤ 48 bar, the disabling when the pressure is ≥ 60 bar.

3.1.2. Driver's request detection

This function monitors the driver's controls detected as tension changes due to movements of the levers on the steering wheel or on the switches placed on the central tunnel control panel.

3.1.3. Information transmission to the driver

This function is used to send messages to the display, to control the buzzer and the warning lights (emergency, automatic, low friction and sport), to inform the driver on the system operation and efficiency conditions.

3.1.4. Clutch control

This function supplies a real-time control of the thrust bearing position, that is the torque transmitted by the engine to the driving wheels, through the clutch.

This function is extremely important to

ensure the performances required by the system as for comfort and sports-driving performance.

The clutch is driven by a closed loop control logic: the TCU controls the actuator on the delivery proportional solenoid valve.

The clutch control strategies are based on the part peculiar curve, that is on the ratio between thrust bearing and transmittable torque position. The curve is self-calibrated by the software through the evaluation of two points: the mating point or point of starting skidding (PIS) and the closed clutch position (Fig. **33**).

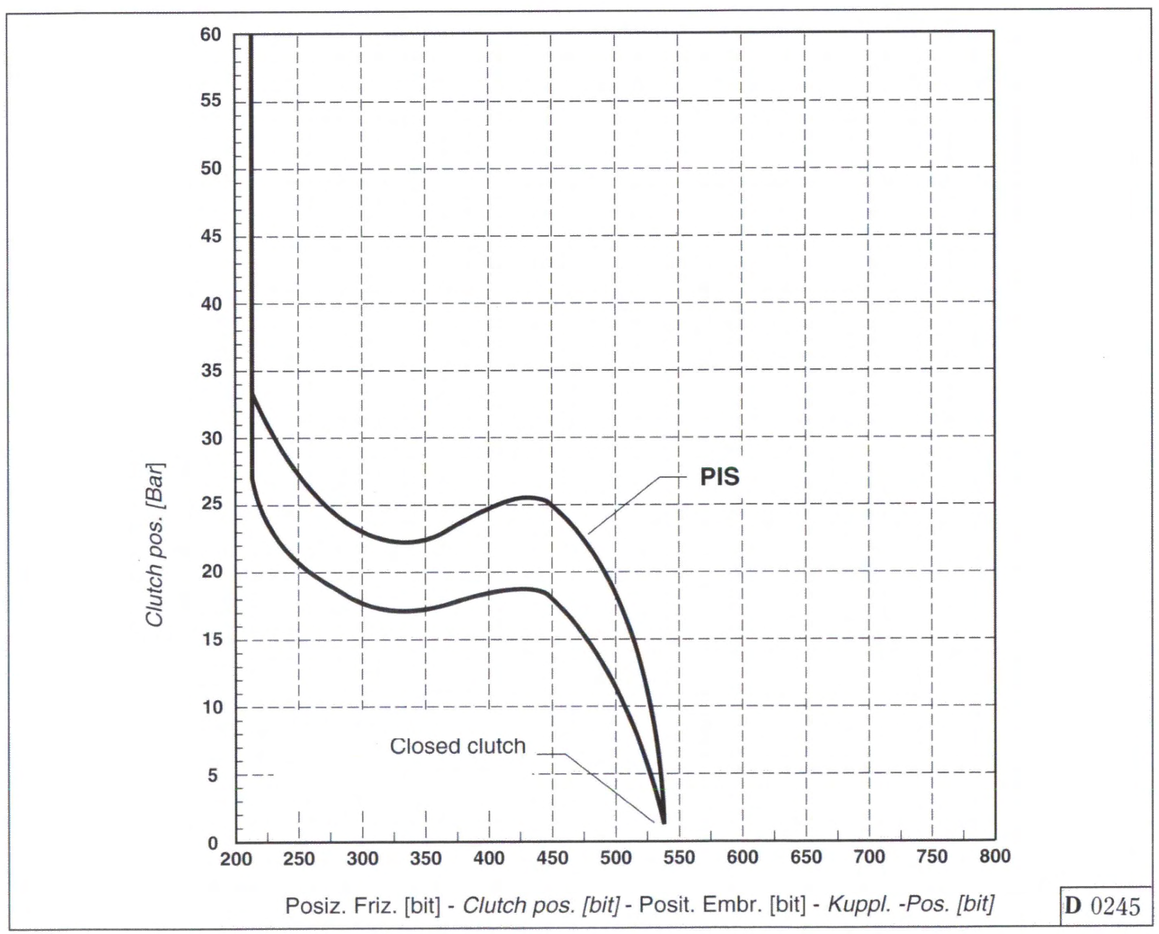

Fig. 33 - Detail of actuator pressure/thrust bearing movement (new clutch).

The first point depends on the clutch wear conditions and on the condition of the friction surface; it is detected whenever the system is started.
The second point depends on the clutch wear conditions and is detected at each gear shifting.

Knowing this point you can monitor the wear type of the friction material and modify the car pick-up parameters, during car starting, until the clutch is worn.

To evaluate the clutch wear, the TCU should contain the information relevant to the thrust bearing position, with new clutch, in closed conditions.

Whenever the clutch is replaced, the closed clutch position - at 0 km - should be stored in the TCU; the same should occur when the TCU must be replaced.

F1 gearbox Marelli ECU replacement

Comply with the following procedure:

1) with key in position "**II**", connect the SD-1 to the previous ECU and note down the new clutch position value (in mm). See: **on SD-1 "DIAGNOSIS" - Page 2 - New clutch position value**.

2) With key in "**OFF**", replace the previous ECU with the new one.

3) With key in position **"II"**, make the "**CYCLE**" procedure through the SD-1.

At the request: **"new clutch"**, reply **"NO"**, correct the default value with the value written down at item **1**).
If the system accepts a max. value by 2 mm (0 < mm < 2); should it be insufficient to reach the value written down at item **1**), complete the cycle and pass to "**DIAGNOSIS**" (new clutch position value; see item **1**) and add the required mm to write down the exact value.

4) **PIS** self-calibration: with key in position **"II"**, wait for the check of all warning lights and start the engine; then, wait about ten seconds, put the key in "**OFF**", wait until the display switches off and repeat this procedure four times (it should be carried out with engine water temperature 60° and 80°C, with disconnected air temperature control system).

5) **"IO"** self-calibration: with key in position **"II"**, wait for the warning light check and start the engine.
Leave the car at idling speed for 5 minutes, in "Neutral", and for 5 minutes with the "first gear" engaged pressing the brake pedal.
Put the key in **"OFF"** and wait until the display switches off.

6) Engagement and selection self-learning procedure (**Octopus**):

a) with released hand brake and key in position **"II"**, wait for the warning light check and position the gearbox in "Neutral". The next steps should be made in a maximum interval of 4 seconds.

b) Press the automatic function push button.

c) Give full throttle and fully depress the pedal with the right foot.

d) With the left foot, press the brake three times and hold it depressed at the third time.
Now, the actuator starts selecting the gears: reverse - first, fourth, fifth.
If the operation is correct, a beep is heard: release the push button and the pedals. Otherwise, the procedure cannot be completed (due to stickings), 4 beeps are heard: put the key in "OFF", wait until the display switches off and repeat the procedure.

e) With key in **"OFF"**, wait until the display switches off.

For better understanding the clutch control strategies, two operating conditions should be taken into account: the pick-up (start) and the gear shifting.

At the pick-up start, the engine runs at idling speed and the car is stopping, in wait conditions.
The driver depresses the accelerator pedal and expresses his will to start; then, the engine speed increases. To avoid excessive rotation speeds of the engine, the clutch should close progressively at a speed depending on how the accelerator pedal is controlled: now the car starts accelerating. The way of closing the clutch is thus linked to the engine rotation speed and to the control given by the driver on the accelerator pedal.

The system modifies the pick-up conditions considering the engine cooling water temperature: when the temperatures are lower, the pick-up occurs at a higher rotation speed.

Repeating or extending too much the pick-up steps (e.g. stopping the car uphill by keeping the accelerator pedal depressed), the clutch dangerously overheats.

Thanks to a mathematical model without sensors, the TCU detects the temperature increase; when the dangerous threshold is reached, the buzzer informs the driver of possible clutch damage.

Now the driver should complete the pick-up step shortly, pressing the accelerator. The buzzer operates at any subsequent pick-up, until the clutch reaches again the standard operating temperature.

Whenever the buzzer is heard, the driver should try and reduce the pick-up times, pressing harder the accelerator pedal, to prevent excessive clutch sliding.

To understand the gear shifting step management by the TCU, it is advisable to consider three subsequent steps made by the driver, even in case of a standard mechanical transmission:

– **torque reduction:** during this step, there is a synchronized check of the reduction of the engine torque, clutch

opening and gear release.

– **No torque:** during this step, the previously-engaged gear is released and the next gearbox ratio is selected and engaged.

– **Torque return:** during this step, there is a synchronized check of the clutch new closing and of the torque request at the engine.

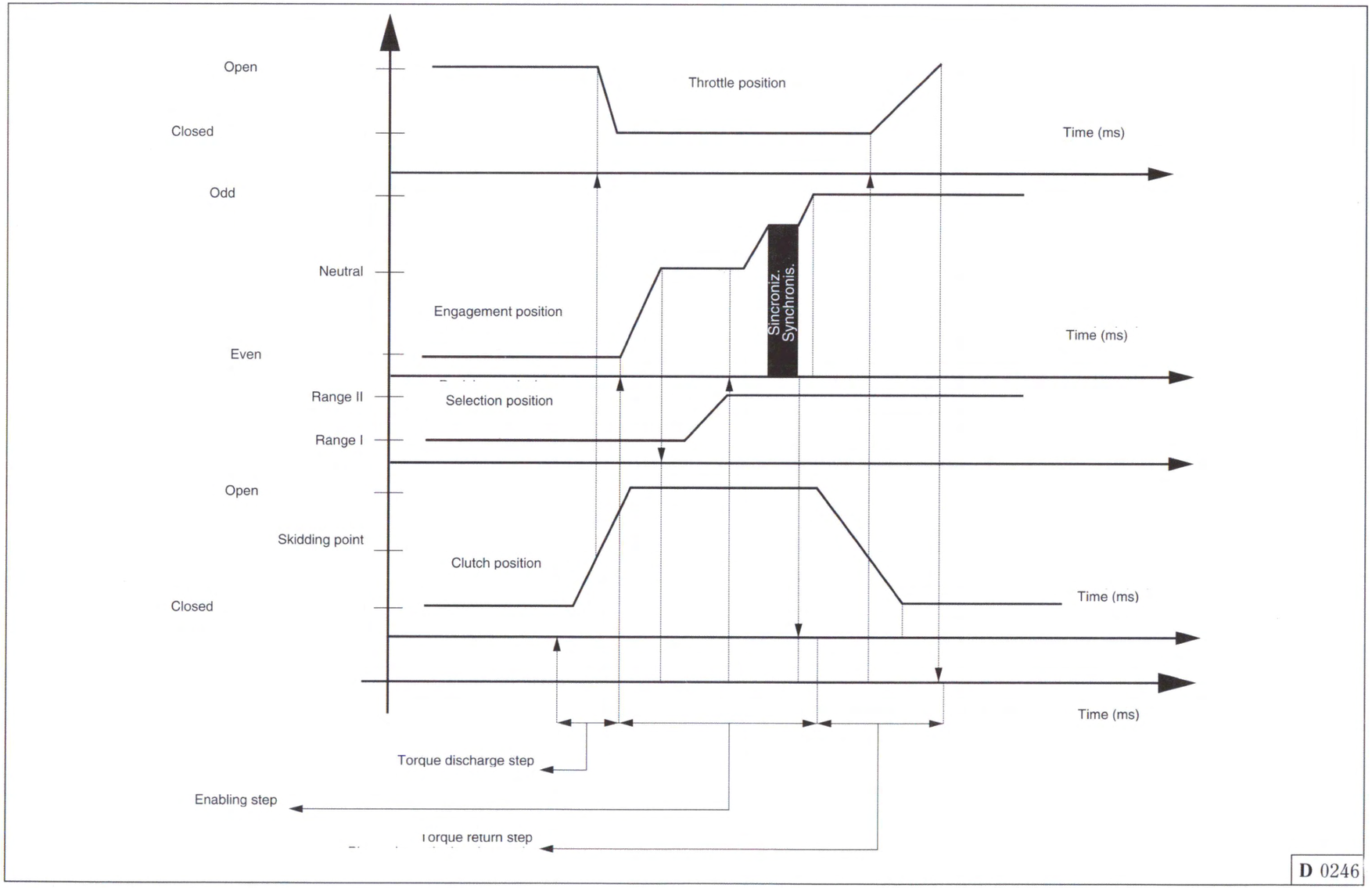

Fig. 34 - Gear shifting time history for "F1 GEARBOX" system.

The clutch control strategies are peculiar and different for each step: during drive reduction, the clutch is opened again, as a function of the torque reduction made by the engine; if there is no drive, the clutch is kept open; during torque return the clutch closing is modulated as a function of the speed difference between engine main shaft and gearbox main shaft.

The clutch control functions during gear shifting consider the throttle angle (accelerator position) and the engine rotation speed: with fully depressed pedal and engine at high rotation speeds, the control setting will be a sports-one.

3.1.5. Gearbox control

The gearbox control is carried out by an engagement and selection actuator, driven by the TCU through the relevant solenoid valves: the pressure proportional valves control the engagement actuator; the ON-OFF solenoid valves control the selection actuator.

The gearbox actuator control replies to the driver's requests by the levers on the steering wheel and the control push buttons on the central tunnel.

Through the request switch for automatic drive, the driver sends to the TCU the gear shifting procedure according to the sketch on Fig. **35**.

3.1.6. Interfacing to the engine monitoring system (EMS)

The communication functions with the ECU of the engine monitoring system have three main aims:

- get the signals coming from the engine;
- control the engine switching off in emergency situations;
- control engine speed and torque during gear shifting.

To understand the engine control operation during gear shifting, it is necessary to examine the three main steps of a gear shifting:

- **drive reduction:**
  during this step a reduction of the supplied torque is asked to the engine, according to a time profile depending on the accelerator position, on the engine revolution number and on the "sport" switch position when the gear shifting is required: the highest the required performance, the quickest the torque reduction.

- **No drive:**
  during this step, the engine should reach a given rotation speed and hold it until the current step ends.
  The rotation speed required to the engine depends on the car speed and on the required gear: the highest the gear, the lowest the engine speed; if you ask for a lower gear, the engine speed should increase.

- **Torque return:**
  during this step, the engine torque should increase, according to a profile depending on the car performance: the highest the performance, the quicker the torque return.

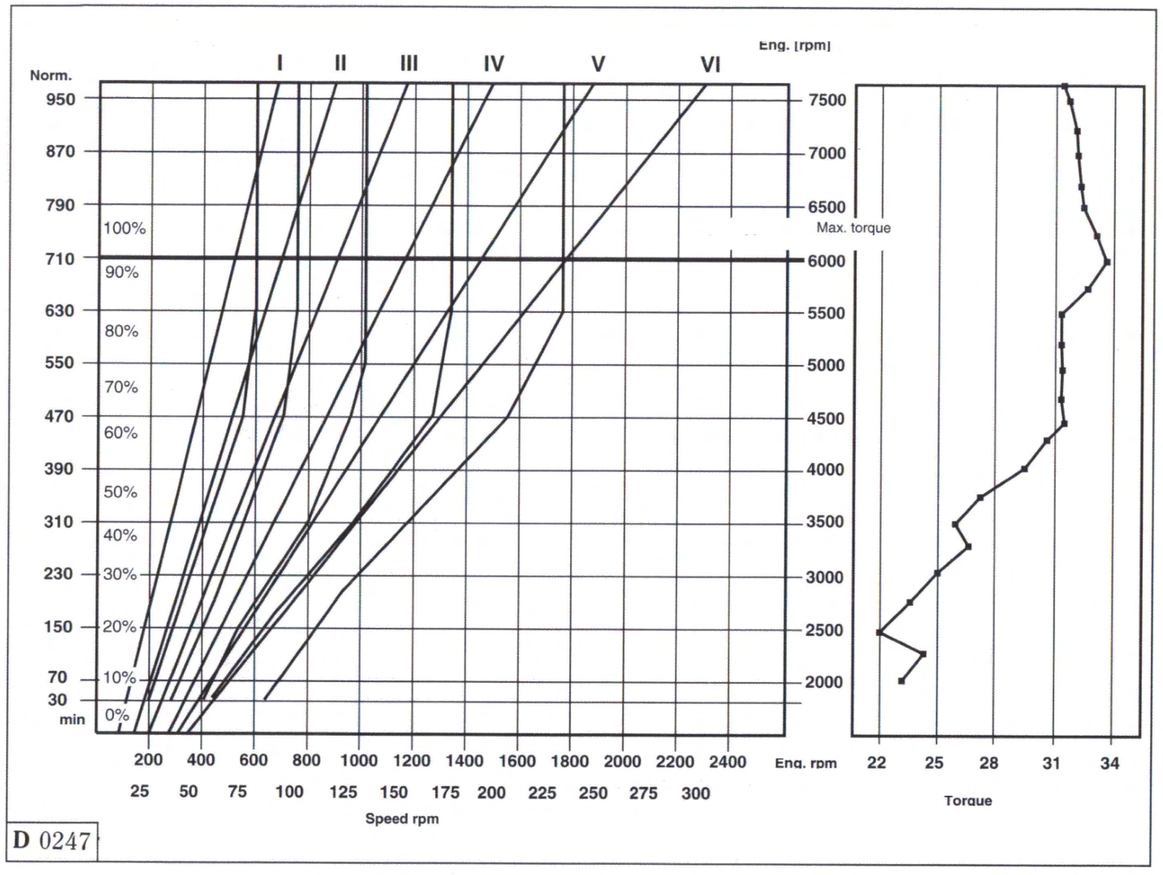

Fig. 35 - Automatic upshiftings sketch for "F1 GEARBOX" system.

3.1.7. Interfacing to the diagnosis system

The TCU is arranged for being connected to suitable diagnosis instruments, therefore it can memorize some parameters peculiar of the car, the possible operating errors and some data about the utilization type of the transmission and in particular gearbox and clutch.

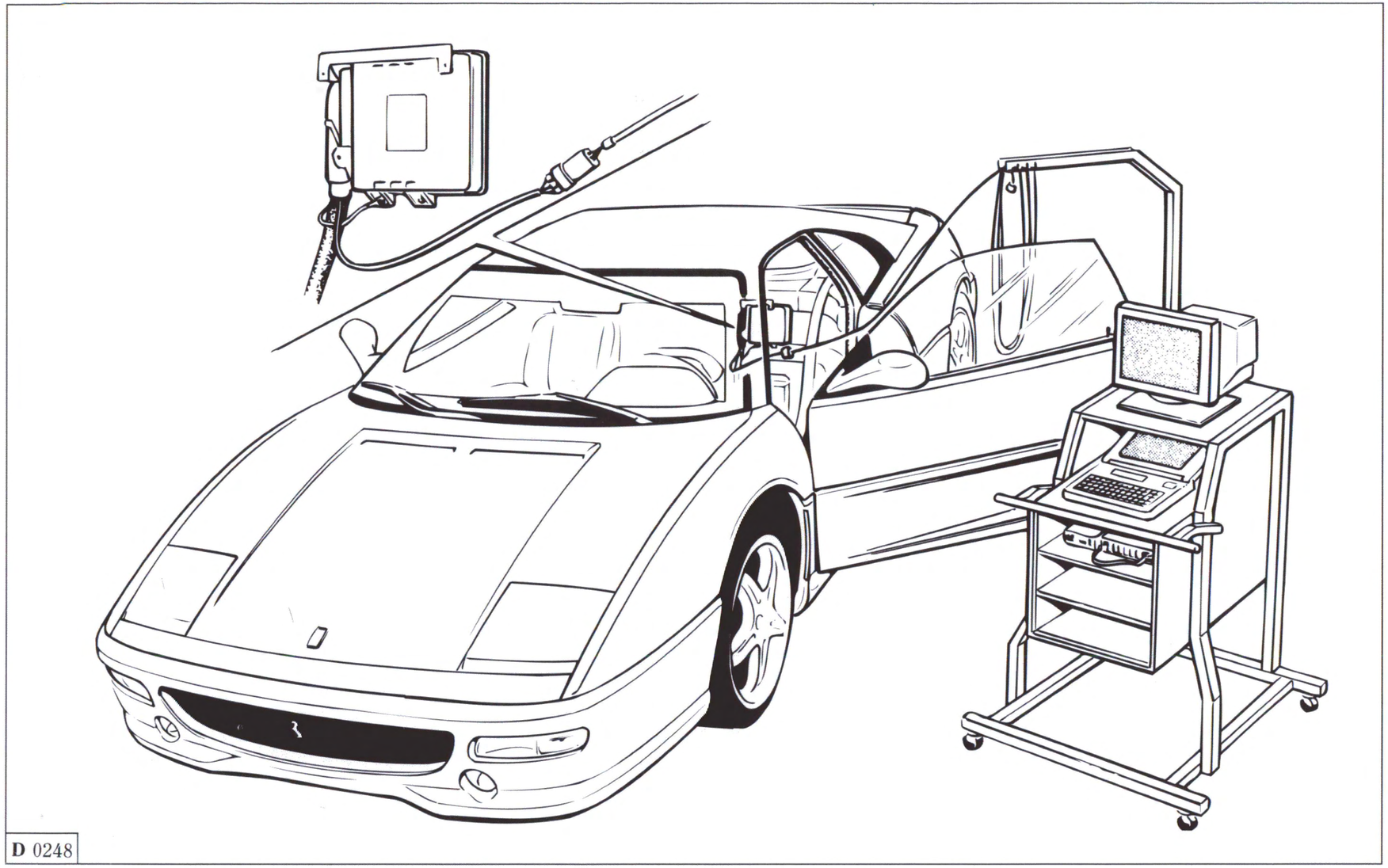

D 0248

Fig. 36 - Connection to the diagnosis system SD-1.

3.2. Safety functions

The system contains many safety functions, whose main aims are:

- prevent an incorrect use of the system;
- detect any malfunctioning, inform the driver and manage recovery interventions to reach the service without stopping the car.

– Protect the transmission mechanical parts, ensuring their life.

– Allow the system starting.
– Accept the driver's controls.

To prevent possible potential dangers due to the incorrect utilization of the car, some functions have been implemented, making this system safer than a mechanical transmission:

– should a gear shifting be asked for, causing the wheel lock, an engine runaway speed or a rotation speed lower than the idling speed, the control isn't accepted.

– With engine running and car at a stand still, if the driver's side door is opened without pressing the brake pedal, the gear is released and neutral is engaged.

– With engine running and car at a stand still, if the engine hood is opened, the gear is released and neutral is engaged.
– With engine running, if the car is stopping, with one gear engaged, for over 4 seconds, without operating the brake or accelerator controls, the gear is released and neutral is engaged.

– With engine running, if the car is at a standstill for over 10 minutes and one gear is engaged, the gear is released and neutral is engaged even though the brake pedal is depressed.

– In case of severe failures of the system, if the car cannot be used safely, the engine is stopped if the car isn't moving.

– Only in case of ice on the roadbed, the "low friction" mode can be controlled through the suitable push button on the central tunnel: in this case, the clutch control is more gradual, the pick-up occurs only in second gear and the engine cannot be used over 2700 rpm, through the automatic gear shifting control when this threshold is exceeded. In sixth gear, the engine can be used in its full operating range.

DIAGNOSIS AIDS

INDEX

1. TCU power supply **D51**

2. Sensor supply (5 V) **D52**
3. Hydraulic power supply **D54**
4. Engine switching-on **D55**
5. Clutch enabling **D56**
6. Gearbox enabling **D57**
7. List of procedures to be implemented after system part replacement **D58**

1. TCU power supply

Possible signs:

A. the display doesn't lit up or, even if it's lit up, the engaged gear isn't displayed.

B. The electric pump is never enabled.
C. The system seems "not to reply" to the lever requests.
D. The TCU doesn't connect to the Ferrari Tester.

Concerned parts:

A. Battery and knife switch connection.

B. 20-A fuse.
C. RLP relay (Self-supply, re. **17c**).

D. Key block.
E. TCU.

F. PLCD supply (less probable).

Practical checks:

A. Check if the knife switch is closed, check the fuse, disconnect the TCU, make a jumper on the RLP relay, check that on pin 1 there are the battery 12 V.

B. Check if, through the ignition key, there are battery 12V on the pin 55 with disconnected TCU.

When everything works:

1. On the pin 30 of the RLP relay there are battery +12V.

2. When you operate the ignition key on the TCU pin 55 there are battery +12V.

3. On the pin 86 of the RLP relay there are battery +12V.

4. The relay RLP closes and sends battery +12V to the TCU pin 1 and to the self-supply points (display and PLCD interface).

2. Sensor supply (5 V)

Possible signs:

A. Gear shiftings are irregular or do not occur.

B. The pump isn't enabled regularly.

Concerned parts:

A. TCU.

B. Pressure transducer.

C. Throttle potentiometer.

D. Engagement and selection potentiometers.

Practical checks:

A. Through the Ferrari Tester, check if the line pressure is between 50 and 60 bar.

B. Through the Ferrari Tester check, during displaying, that while pressing the accelerator pedal the signal varies from 100 to 800 bit.

C. Through the Ferrari Tester check if the engagement and selection position values range within the min. and max. limits.

D. Check, through a Tester, the tensions between pins 18 and 39 and pins 36 and 39.

Remarks: the short-circuit of one of the concerned parts can compromise supply and thus the behaviour of the others. Thus, as a result of power lack on a connector, check among the others which could be the concerned one.

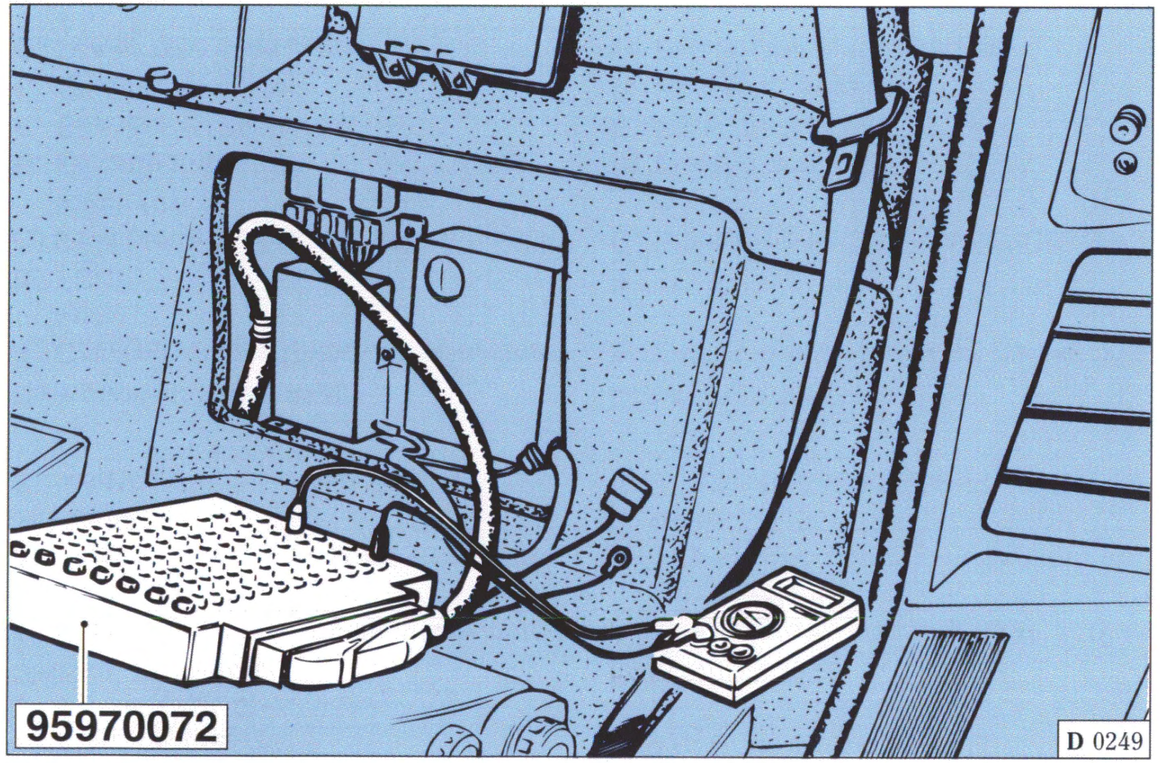

Fig. 37 - Connector to 55-way interconnector.

3. Hydraulic power supply

Possible signs:

A. The gearbox warning light flashes continuously.

B. The electric pump isn't enabled correctly.

C. The system doesn't shift gears.

Concerned parts:

A. Battery and knife switch connection.

B. TCU.

C. Electric pump relay (re. **17b**) and 40-A fuse.

D. Electric pump.

E. Pressure sensor.

F. Hydraulic circuit.

G. Power Unit and actuators.

Practical checks:

A. Through the Ferrari Tester, check if the line pressure is between 50 and 60 bar.

B. If the pressure value is below 50 bar, check if the electric pump is supplied with battery +12 V through the 40-A fuse and the RLE relay controlled by the TCU pin 48.

C. If the electric pump operates and the pressure doesn't increase, check the pressure transducer or possible hydraulic leaks, included those of the screws used for the system bleeding in the hydraulic actuator, as well as the oil level in the tank.

When everything works:

A. The electric pump must be enabled

when the pressure drops below 50 bar and disabled when it reaches 60 bar (displaying on Ferrari Tester).

B. The electric pump enabling time at standard speed should be lower than 4÷5 seconds and the disabling time shouldn't be lower than 8÷10 seconds.

4. Engine switching on

Possible signs:

A. The starter doesn't work (indispensable sign).

B. The display shows an engaged gear or a flashing N.

Concerned parts:

A. Battery and knife switch connection.

B. Key block.

C. Starting relay and CD diode module.

D. TCU.

E. Engagement potentiometer.

F. Engagement solenoid valves.

Practical checks:

A. If the display shows a fixed N, check if there are battery +12 V on the TCU pin 30, and then if on the pin 87 of the RLA relay there are the battery +12 V, through the key block.

B. If, after asking for neutral, the display shows an engaged gear or flashing N, check (through the Ferrari Tester) that the engagement position indication is within the neutral min. and max. limits, otherwise check "**6. Gearbox enabling**".

When everything works:

A. The system controls the RLA relay in closed position if the gearbox is in neutral and thus the display shows a fixed N.

Remarks: if no switching on occurs even though the starter operates, the problem isn't due to the gearbox system.

5. Clutch enabling

Possible signs:

A. The gearbox self-learning procedure isn't made.
B. The system doesn't accept gear shiftings.

Concerned parts:

A. Hydraulic power and Quick Disconnect.
B. Clutch solenoid valve.
C. Clutch sensor and PLCD interface.

D. Lever control.
E. TCU.

Practical checks:

A. Check if there is hydraulic power and if the Quick Disconnect is connected correctly.
B. Check, during a gear shifting with engine off, that, displaying the clutch position signal through the Ferrari Tester, the clutch opens over the PIS, then closes again (see Ferrari Tester parameters).

C. Check the lever control.

D. To understand if there is no enabling or the sensor reply is wrong, check, during a gear shifting, the clutch solenoid valve control current.

When everything works:

B. During a gear shifting, even with engine off, the clutch should open over the PIS and then, after gear engagement, close again (see operator's manual).

6. Gearbox enabling

Possible signs:

A. The system doesn't shift gears.

B. The system engages the wrong gear.

Concerned parts:

A. Clutch enabling.

B. Engagement and selection solenoid valves.

C. Engagement and selection potentiometers.

D. TCU.

E. Pick-up and revolution signals (only if there's no enabling with engine running).

Practical checks:

A. Check **"5 Clutch enabling"**.

B. Check, during a gear shifting request, if the control currents of the concerned solenoid valves comply with the table in the operator's manual.

C. Through parameter reading by Ferrari Tester, check the consistency of the Engagement and Selection potentiometer signals by making some gear shiftings in open loop.

When everything works:

A. The enabling sequence is the following (see Time History on page **D44** of the operator's manual):

1. the clutch opens;
2. the gear is released (both engagement solenoid valves are triggered);

3. if required, a gear is selected (selection solenoid valves triggering as per table);
4. the required gear is engaged (selection solenoid valve triggering as per table);
5. the clutch closes.

7. List of procedures to be implemented after system part replacement

* **PIS self-calibration:** start the engine three or four times (at cold), always switching the system off until the display switches off as well.

* **IO self-calibration:** with engine on, engage the first, hold the brake pedal depressed and release the accelerator pedal for about 1 minute.
Ask for neutral and repeat the procedure a few times.

PART REPLACEMENT

PART	PROCEDURE	REMARKS
Power Unit	- Air bleeding from the hydraulic circuit (clutch actuator)	Ferrari Tester
	- Air bleeding from the hydraulic circuit (engag./sel. actuator)	Ferrari Tester
	IO self-calibration	*
Gearbox actuator	- Air bleeding from the hydraulic circuit (clutch actuator)	Ferrari Tester
	- Air bleeding from the hydraulic circuit (engag./sel. actuator)	Ferrari Tester
	- Actuator centering	Ferrari Tester
	- Ferrari Tester self-learning	Ferrari Tester
Lines	- Air bleeding from the hydraulic circuit (clutch actuator)	
	- Air bleeding from the hydraulic circuit (engag./sel. actuator)	
Levers	- None	
Throttle potentiometer	- IO self-calibration	*
TCU	- Self-learning	*
	- Market customization	*
	- PIS self-calibration	*
	- IO self-calibration	*
	- New closed clutch value	*
Clutch	- PIS self-calibration	*
	- New closed clutch value	*
Display	- None	
Relay and buzzer	- None	
Switches (doors, reverse ...)	- None	

* **New closed clutch value:**

1. **new clutch:** read through the Ferrari Tester the clutch stroke value, with engine off, then write it in the clutch procedure listed in the diagnosis page.

2. If the TCU is replaced instead of the clutch and you cannot read the value recorded in the diagnosis page, through some pick-up tests modify the value to be set as follows:
   – if the car picks up over 1700÷1800 rpm, decrease the set value; if the car sticks or picks up too suddenly, increase the set value.
   (This value shouldn't be over the clutch stroke value of the car). If you can read the value recorded in the diagnosis page through the previous TCU, set it on the new TCU.

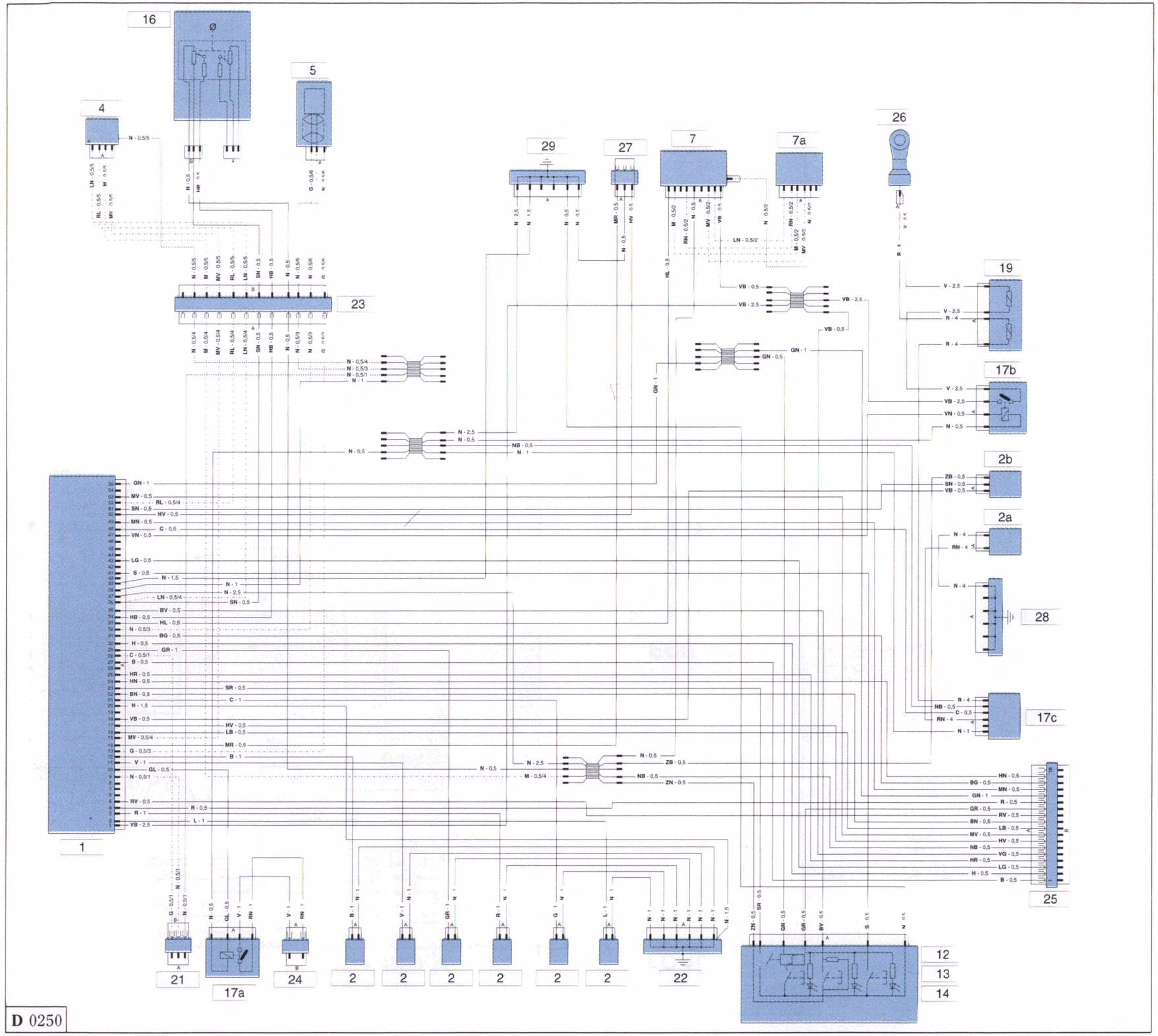

Fig. 38 - Wiring diagramme.

D 0250

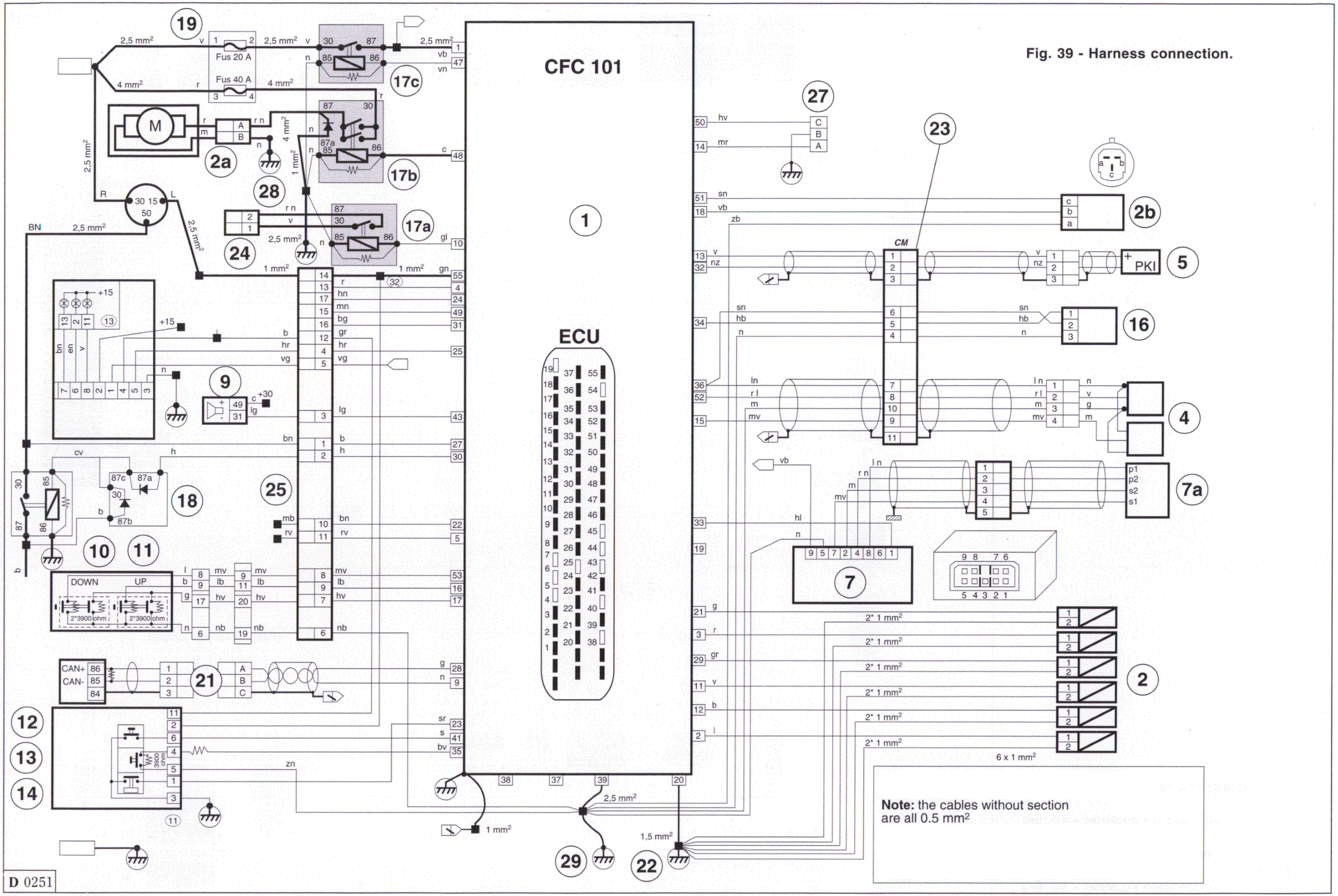

Fig. 39 - Harness connection.

Fig. 39 - Wiring diagramme

1 - Transmission control unit (TCU);

2 - Power Unit;
2a - Pump;
2b - Pressure transducer;
3 - Hydraulic oil tank;
4 - Engagement and selection actuator;

5 - Clutch control actuator;
6 - Quick coupling for clutch opening in case of failure;
7 - Clutch position interface ECU;

7a - Clutch sensor;
8 - Gear display;

9 - Buzzer;
10 - "UP" lever;
11 - "DOWN" lever;
12 - Reverse control lever;
13 - "AUTOMATIC" push button;
14 - "LOW FRICTION" push button;
15 - Brake switch;
16 - Throttle position;
17 - Relay:
A) reverse lights;
B) TCU supply;
C) pump relay;
18 - Diode bridge;
19 - Fuses;
20 - "SPORT" push button;
21 - CAN line connector (TCU - Motronic);

22 - Ground;
23 - Engine system connector;

24 - Reverse light connector;
25 - Dashboard system connector;

26 - Positive terminal board;
27 - Diagnosis socket;
28 - Pump mass;
29 - ECU mass.

Procedure to be followed for actuator centering on F355 F1 gearboxes

This procedure should be followed whenever the gearbox rod actuator is disconnected (e.g. gearbox overhaul, actuator replacement).

Introduction

The kit should be checked for possible oil leakages. Check also the selection/engagement potentiometer connector.

Check the oil level in the tank.

The battery should be in good operating conditions.

1) The gearbox should be placed in the neutral between third and fourth gear and the rod should be locked through the suitable tooling (put the rod in the middle of the clearance).

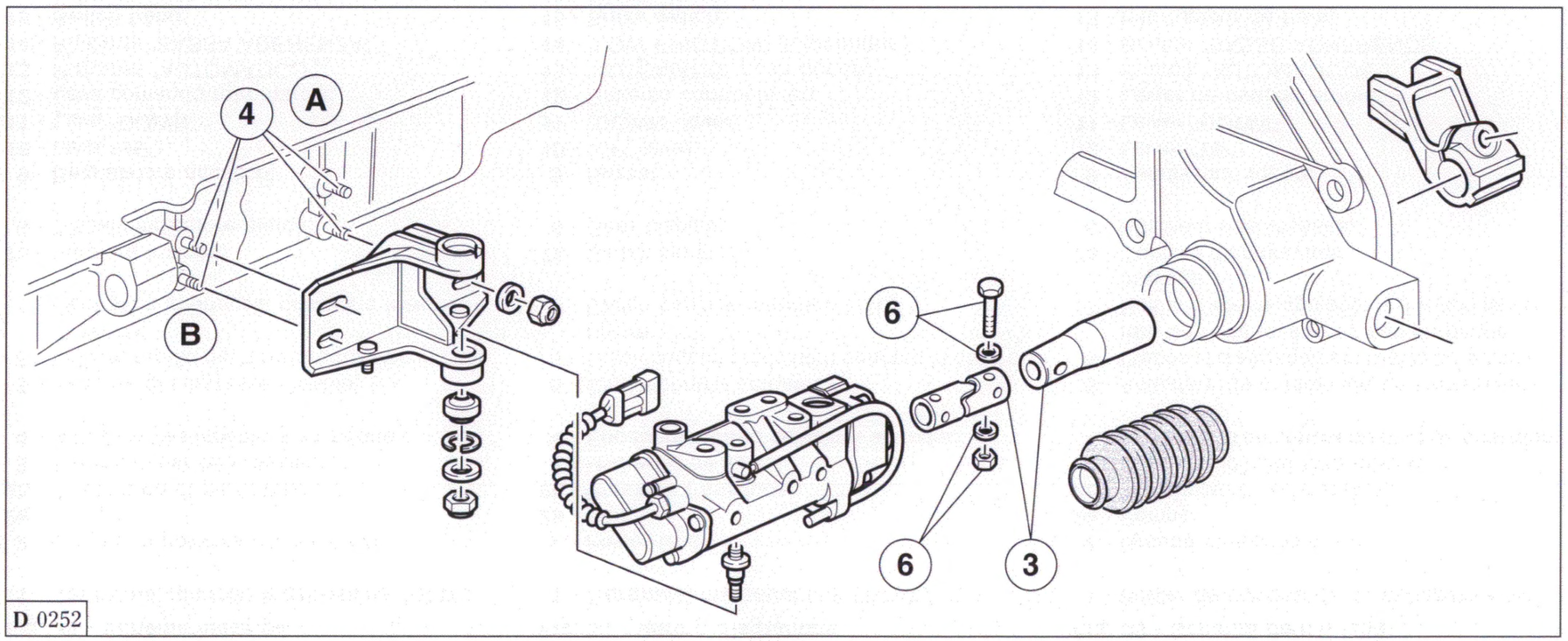

Fig. 40

2) Fit the rubber protecting bellows between gearbox rod and cardan joint, paying the utmost care.

3) Fit the cardan joint of the kit on the gearbox rod, without fitting the locking screw (Fig. **40**).

4) Place the actuator on the crankcase studs without tightening the bolts (Fig. **40**).

5) Connect the SD-1 and center the actuator as described in the **"DIAGNOSIS"** page.
At the request "**Connect the gear shaft of the gearbox**", carry out the steps marked by (*), then press enter. The end of the procedure is signalled by the buzzer.

6) *Fit the cardan joint/gearbox rod fastening screw, paying attention there is no interference between the two holes (Fig. **40**).

7) *Tighten the actuator to the crankcase according to the prescribed tightening torques.

It is important to avoid any interference between cardan joint and gearbox rod during this operation.

In particular, the tightening screw should move freely in vertical direction. Otherwise, carry out the operation from point 5.

For a good result of the operations, first tighten the nuts on the gear shaft side (**A**), then those on the opposite side (**B**) (Fig. **40**).

8) *Tighten the cardan joint/gearbox rod screw according to the prescribed tightening torques.

9) At the end of the centering procedure according to the computer instructions, the actuator is released by releasing pressure from the circuit.

Caution: do not leave the system actuator enabled for more than 5 minutes.

10) Disassemble the locking tooling.

11) Carry out the **"CYCLE"** of system approval, through the SD-1.

During self-learning, the enabling procedure for max. selection and engagement thresholds of the gearbox for reverse, first, fourth and fifth is enabled.

When some values are exceeded, a single beep of the buzzer warns the operator. The buzzer starts also in case of positive result by the computer.

Should the prescribed thresholds not be exceeded and displayed on the monitor, maybe the centering hasn't been correctly made (the centering precision degree can be evaluated in parameter mode); in this case, the procedure should be repeated from the beginning **.

(**Disconnect the cardan joint and loosen the actuator fastening bolts).

12) Printing of the commissioning result.

DISASSEMBLY AND NEW ASSEMBLY PROCEDURES OF THE HYDRAULIC SYSTEM PARTS

The hydraulic system can be supplied as spare part, in three different versions:

– **complete system**, corresponding to the first genuine outfit;
– **main parts**, formed by:

  • power unit with bracket;

  • actuator with bracket.
– **Basic parts**, formed by all parts shown in Fig. **41**.

Note: the hydraulic parts installed on the complete Power Unit, such as valves, pressure sensor, motor and oil pump aren't supplied as spare parts; in case of breakage, the complete Power Unit must be replaced.
The same occurs for the actuator: in case of failure, it must be disassembled and replaced.

1 - Disassembly and new assembly of the whole system

1.1 - Disassembly

1.1.1 Empty the oil tank by a sucking pump and disassemble it by loosening the screws (**24**).

1.1.2 Disconnect the fast coupler of the clutch actuator (**15**) from the connection block.

1.1.3 Loosen the two nuts (**11**) fastening the block to the chassis.

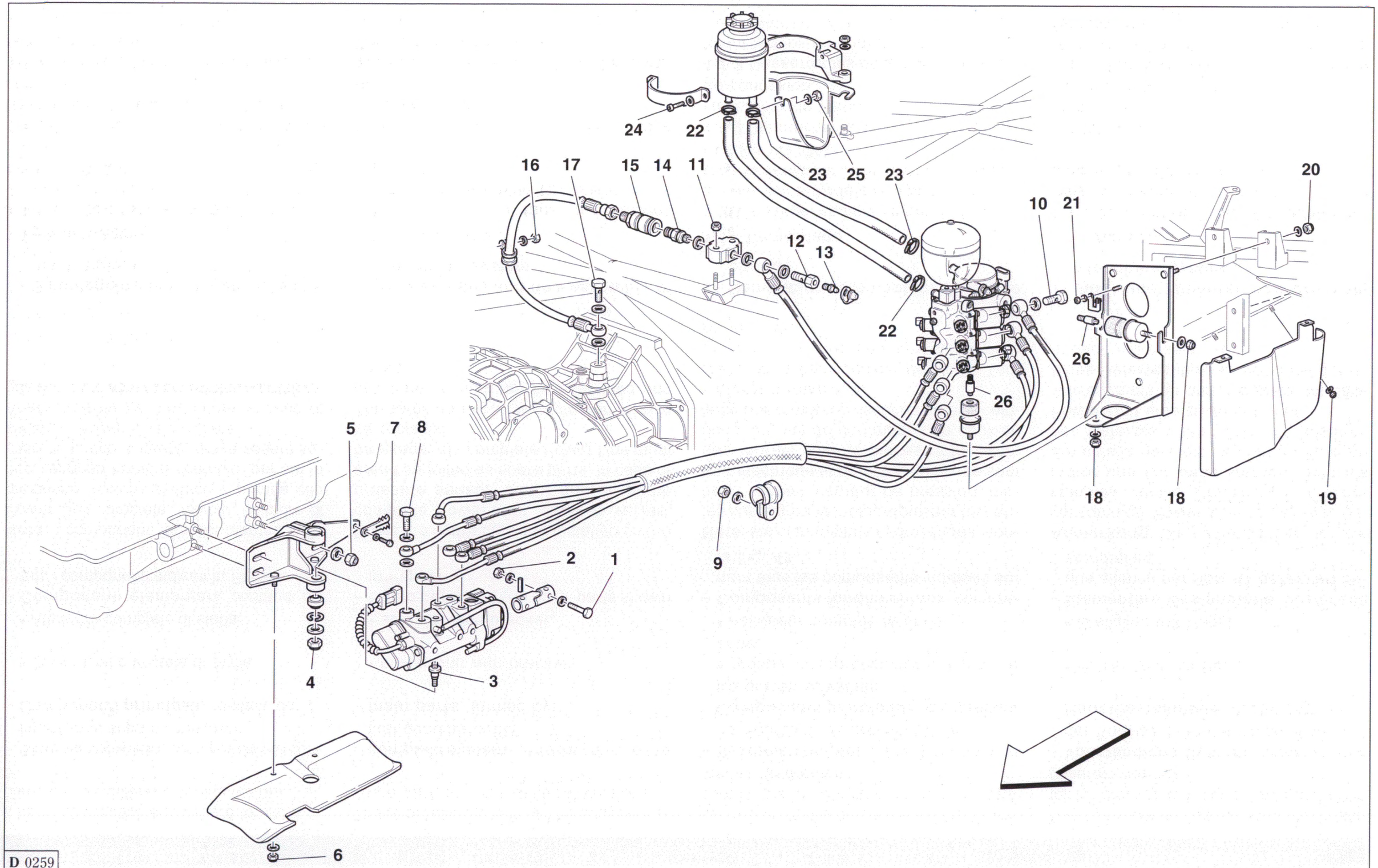

Fig. 41 - Hidraulic system parts.

1.1.4 Disconnect the Power Unit lines by loosening the relevant clamps **22** and **23**.

1.1.5 Disconnect all the Power Unit electrical connectors (8 in total).

1.1.6 Loosen the three Power Unit fastening nuts.

1.1.7 Loosen the fastening bolt of the actuator cardan on the gearbox shaft and remove it.

1.1.8 Remove the protection sheet panel.

1.1.9 Disconnect the actuator position sensor connector.

1.1.10 Loosen the four actuator bracket fastening nuts on the chassis.

The hydraulic system is now ready for being removed; this operation must be carried out without disconnecting the high pressure lines, and thus two workers are required.

1.1.11 Remove the hydraulic system from the rear wheel area.

1.2 - New assembly of the new complete unit

Hold the Power Unit vertical and the accumulator facing upwards, then proceed as follows:

1.2.1 Empty the oil tank by a sucking pump.

1.2.2 Disconnect the two oil pipes from the Power Unit, loosening the relevant clamps.

1.2.3 Plug the oil inlet and drain pipes to the Power Unit with plastic caps, to prevent any oil drainage and air inlet during the system handling.

Note: do not remove the oil from the pump cover as the system bleeding step would be longer.

1.2.4 Fit the hydraulic system from the rear left wheel. The gearbox should be in idling position between third and fourth.

1.2.5 Before fastening the Power Unit to the chassis, connect the tank lines by tightening the relevant clamps to the prescribed tightening torque.

1.2.6 Fasten the Power Unit to the chassis by tightening the three nuts to the prescribed torque.

1.2.7 Make the Power Unit electrical connections according to the wiring diagram (Fig. **38** and **39**).

1.2.8 Fit the tank on the relevant aluminium support by fastening it through the suitable clamp, with the 2 screws and the 2 spring washers; tighten the screws to the prescribed torque.

1.2.9 Install the clutch fast coupling block on the chassis, locking it through the nuts **11**, tightened to the prescribed torque.

1.2.10 Connect the fast connector of the clutch actuator to the connection block.

1.2.11 Fill the tank with Shell Donax TX type oil (about 0.75 l).

1.2.12 Place the actuator in the suitable area between chassis and gearbox.

Caution

Due to the limited area, this operation could be extremely hard; move the actuator to position it correctly without operating on the high pressure lines and check that, during this movement, these lines aren't damaged or moved.

1.2.13 Fit the cardan on the gearbox shaft.

1.2.14 Position the actuator bracket with the slots fit in the four fastening stud bolts.

1.2.15 Install the 4 nuts, with the relevant spring washers, without tightening them fully.

1.2.16 Center the actuator (see page **D64**).

1.2.17 Tighten the cardan locking screw to the prescribed torque.

1.2.18 Tighten the 4 nuts to the prescribed torque.

1.2.19 Install the actuator sheet panel again, tightening the nut to the prescribed torque.

1.2.20 Bleed the circuit as described at page **D4**.

1.2.21 Check the oil level in the tank and possibly top up, reaching the suitable notch with circuit off.

2 - Disassembly and new assembly of the main parts

Even only one of the above parts can be replaced, but the operation must be made after disassembling the system from the car, as the high pressure lines must be correctly oriented and tightened to the prescribed torque.

Note: copper gaskets can be used just once and they must be replaced after each torque tightening, if a further tightening is required.

2.1 - Power Unit disassembly

2.1.1 Carry out the procedures described in **1.1**.

2.1.2 After fastening the system to the bench, disassemble the high pressure lines installed on the Power Unit, loosening the relevant fittings **10**.

2.1.3 Plug the line ends (banjo unions) with caps, to avoid oil leakage and the possible inlet of polluting matters.

2.2 - Power Unit new assembly

2.2.1 Replace the faulty Power Unit.

2.2.2 Install the fittings (**10**) with the suitable gaskets, tightening them manually so that the banjo unions can rotate during assembly.

Note: pay special attention during assembly, as the lines must be correctly oriented, without unnatural elbows and wrong positioning with respect to the car body and to the drive unit.

2.2.3 Tighten the fittings to the prescribed torque.

2.2.4 Carry out the procedures described in **1.2**.

2.3 - Actuator disassembly

2.3.1 Carry out the procedures described in **1.1**.

2.3.2 Fasten the system on the bench and disassemble the high pressure lines, loosening the fittings **8**.

2.3.3 Plug the line ends (banjo unions) with caps, to avoid oil leakage and the possible inlet of polluting matters.

2.4 - Actuator new assembly

2.4.1 Replace the faulty actuator.

2.4.2 Install the fittings (**8**) with the suitable gaskets, tightening them manually so that the banjo unions can rotate.

2.4.3 Position the lines orienting them correctly, without unnatural elbows and wrong positioning with respect to the car body and to the drive unit.

2.4.4 Tighten the fittings (**8**) to the prescribed torque.

2.4.5 Carry out the procedures described in **1.2**.

3 - Basic part replacement

The table summarizes the basic parts that can be replaced and must be tightened to a prescribed torque.

The **Execution** column describes the methods for a correct work performance.

Bench = operation to be made with system disassembled from the car, see **2.1**, **2.2**, **2.3** and **2.4**.

Car = operation to be made without removing the main parts.

The **bleeding** column states if the bleeding must be made at the end of the procedure, or not.

3 - Basic parts and tightening torques

No.	Torque Nm	Description	Execution	Bleeding
1	34	Cardan/gearbox shaft fastening screw	car	no
2	34	Nut for cardan/gearbox shaft fastening screw	car	no
3	17 ÷ 19	Actuator/support bracket fastening pin	bench	no
4	17 ÷ 19	Nut for actuator/support bracket fastening pin	car	no
5	25	Actuator bracket to gearbox fastening nut	car	no
6	4 ÷ 5	Actuator protecting sheet panel fastening nut	car	no
7	4 ÷ 5	Connector support bracket fastening screw	car	no
8	20 ÷ 24	High pressure line fastening fitting	bench	yes
9	4 ÷ 5	Fastening nut for high pressure line support clamp	car	no
10	20 ÷ 24	High pressure line fastening fitting	bench	yes
11	0,74	Fast coupling block fastening nut	car	no
12	20 ÷ 24	Bleed screw manifold	car	no
13	9 ÷ 11	Bleed screw	car	yes
14	9 ÷ 11	Male fast coupling	car	yes
15	20 ÷ 24	Female fast coupling	car	yes
16	4 ÷ 5	Fastening nut for clutch pipe support clamp	car	no
17	2,1	High pressure line (clutch) fastening fitting	car	yes
18	7 ÷ 8	Cup fastening nut	car	no
19	4 ÷ 5	Heat sheet panel fastening nut	car	no
20	7 ÷ 8	Power Unit bracket to chassis fastening nut	car	no
21	4 ÷ 5	Connector support bracket fastening nut	car	no
22	2,5 ÷ 3	Clamp with low pressure line fastening screw	car	no
23	2,5 ÷ 3	Tank support clamp fastening screw	car	no
24	1,1	Tank support clamp fastening screw	car	no
25	1,1	Tank support bracket fastening nut	car	no
26	14 ÷ 16	Expansion bolt supporting pin	bench	no

Tool summary table

95973070	**AV3070**	Clutch release tool
95976780	**AM106780**	Tool for rocker control fork positioning
95976781	**AM106781**	Tool for gearshift lever locking in idle

D
75

March '95

F

CONTENTS

- Introduction **F5**
- Wheel bearing replacement **F9**
- Shock absorber adjustment **F12**
- Checking and adjusting wheel alignment **F13**
- Shock absorbers **F21**
- Spring **F22**
- Variable-setting shock absorbers **F24**
- System diagnosis **F34**
- Rim peridical checks **F37**

- Tightening torque summary table **F51**

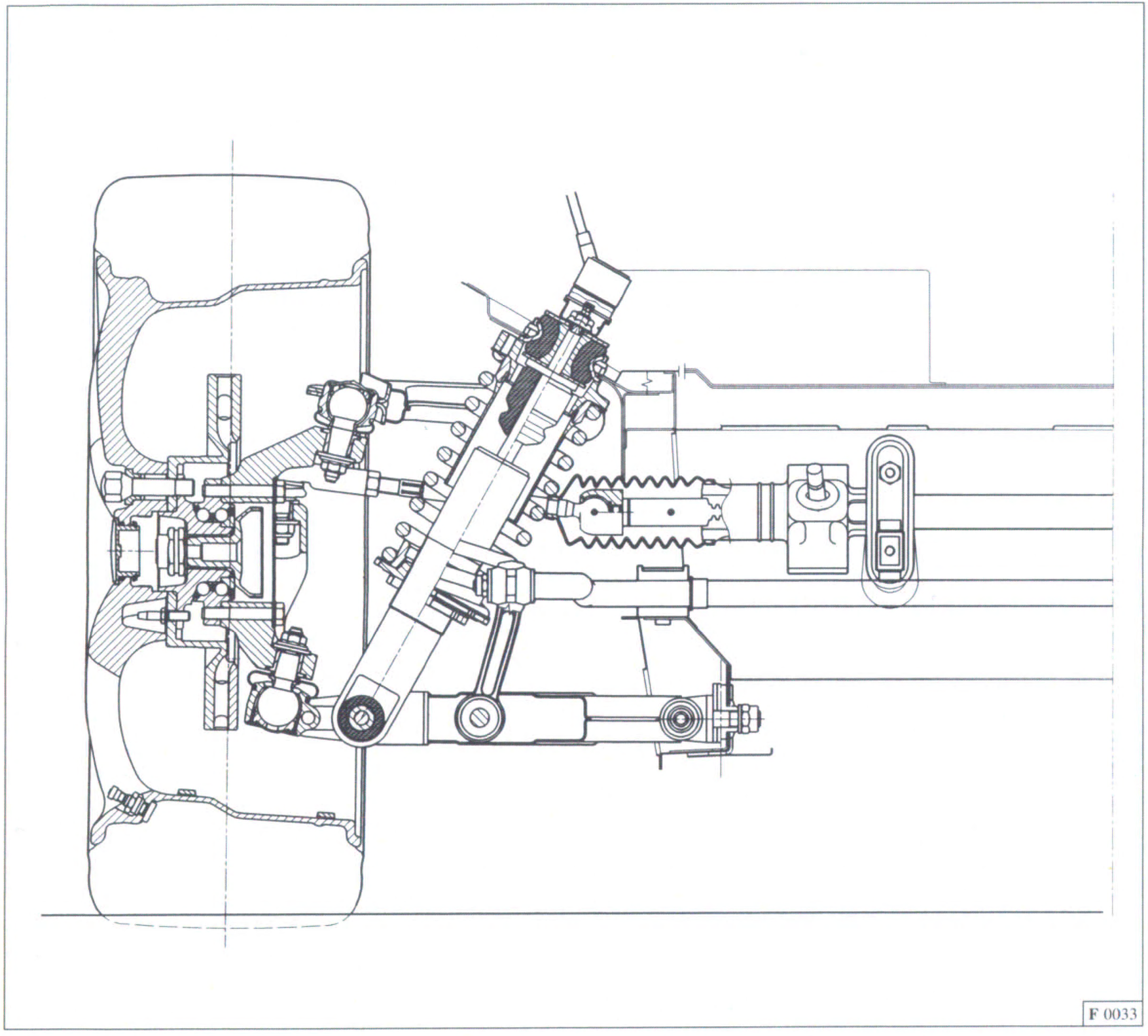

F 0033

Fig. 1 - Front suspension.

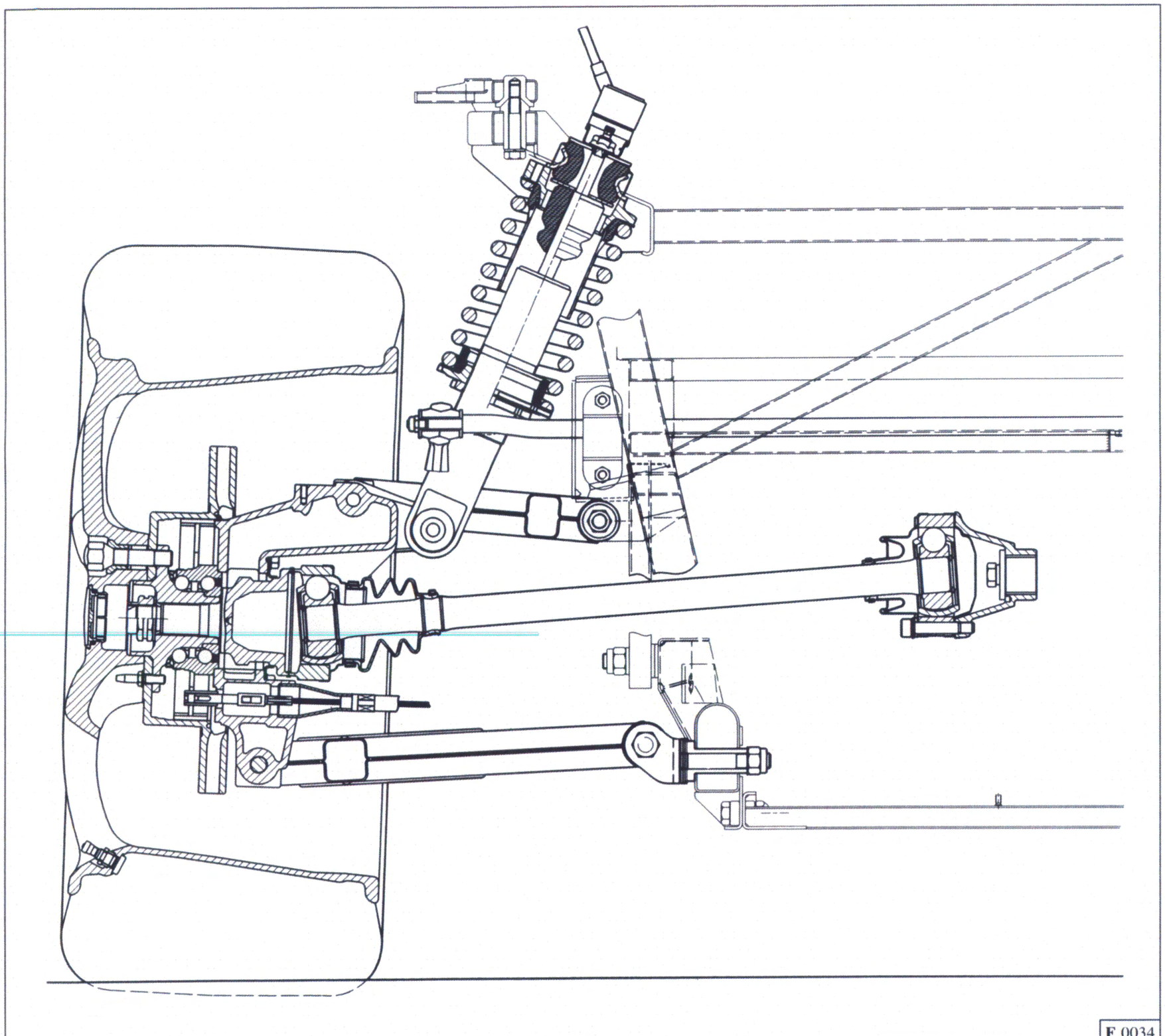

F 0034

Fig. 2 - Rear suspension.

Introduction

Suspension systems are all-round independent type with lower and upper swinging arms made out of pressed, welded high-tensile steel sheet to reduce the effect of unsuspended masses, coil springs, telescopic double-acting gas shock absorbers with rubber blocks for upper and lower rebound bumpers with ball joint.

Low kingpin offset to improve braking stability and minimise kick-back on steering wheel.

Anti-dive configuration because the upper arm is tilted to reduce pitching effect when braking.

Rear and front transverse stabilizer bar.

A one-piece double-row ball bearing is fitted to the hub. It does not require periodic clearance checks and is well protected from water and dirt.

Flexible bushings connecting swinging arms to chassis do not require greasing.
The vehicle is equipped with a "BILSTEIN" shock absorption adjustment system.

Main checks to be made on suspension component check

Check end float and free play of pins connecting arms to forks.

Replace bushings if play found to be excessive.

Check if shock absorbers operate efficiently.

Check top shock absorbers attachment Hyperblocks.

Check the efficiency of shock absorber lower joints.

Check that suspension arm upper rebound bumpers (on shock absorbers) work efficiently.

Check stabilizer bar alignment, as well as tie-rod joint and support rubber block efficiency.

Check swinging arms for signs of distortion.

Ensure that ball joint rubber gaskets are in good condition.

Refer to specifications in table on pages **F 22** in order to check that coil springs do not show signs of distortion or cracking.

Note: adjustable washer **1** (Fig. **8**) can be used to adapt the shock absorbers to springs of different colour categories, the left and right springs need no longer be of the same colour - although this is always preferable.

Vehicles are fitted with springs of the same colour on the front axle (right and left sides) and rear axle (right and left sides).

Bushes connecting swinging arms to chassis

Suspension arms are connected to chassis forks by means of new-type Flanblock flexible bushings, with free rotation.

If, during disassembly, the bushing proves excessively worn, strained, or if it has a too high rotation torque (< 2 kgm), replace the whole bushing.

Refit the suspension arms in the static load position so that Flanblock bushings are not twisted too much under normal working conditions.

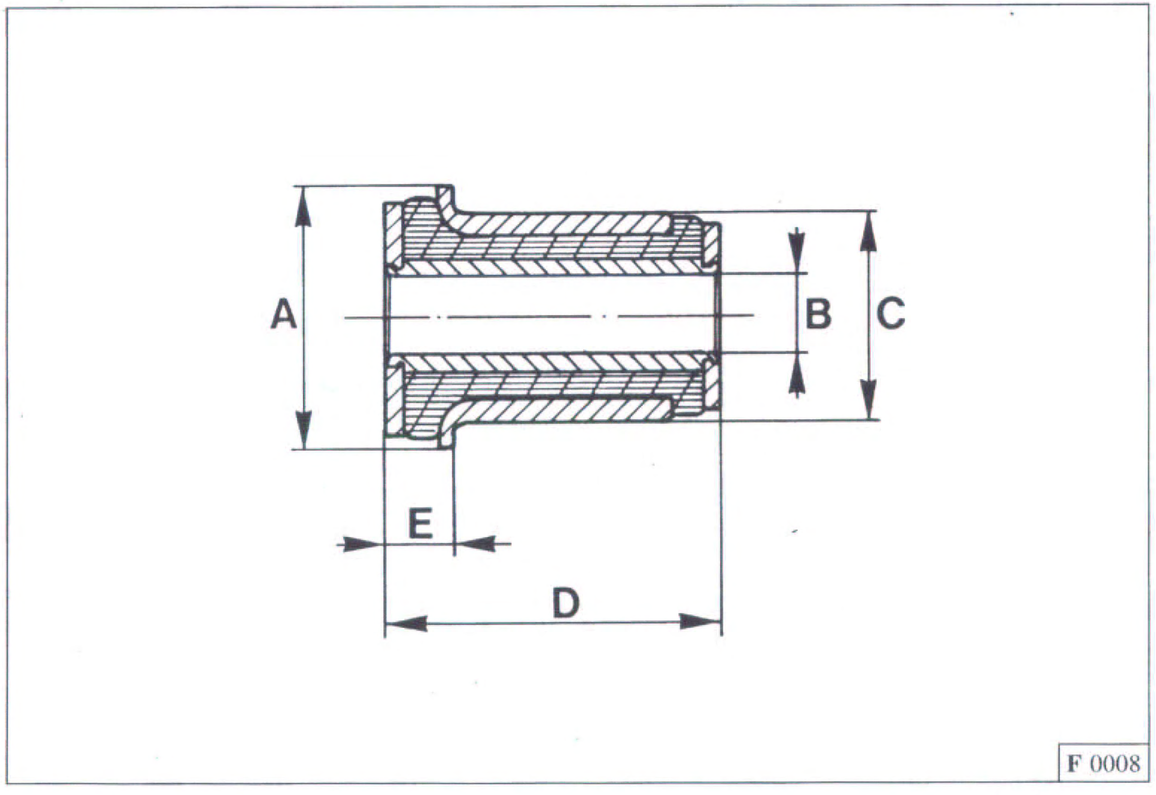

Fig. 3 - Flanblock for suspension arms.

	① Part. No. 163038	② Part. No. 161571	③ Part. No. 161572	④ Part. No. 161573
Ø A	38 ± 0,2	38 ± 0,2	43 ± 0,2	43 ± 0,2
Ø B	12,05 ÷ 12,15	12,05 ÷ 12,15	14,05 ÷ 14,15	14,05 ÷ 14,15
Ø C	29,5 ± 0,1	29,5 ± 0,1	33,5 ± 0,1	33,5 ± 0,1
D	47 ± 0,1	47 ± 0,1	49 ± 0,5	56 ± 0,1
E	9,3 ± 0,5	9,3 ± 0,5	13 ± 0,5	12,5 ± 0,5
Shore	65 ÷ 69	70 ÷ 74	70 ÷ 74	70 ÷ 74

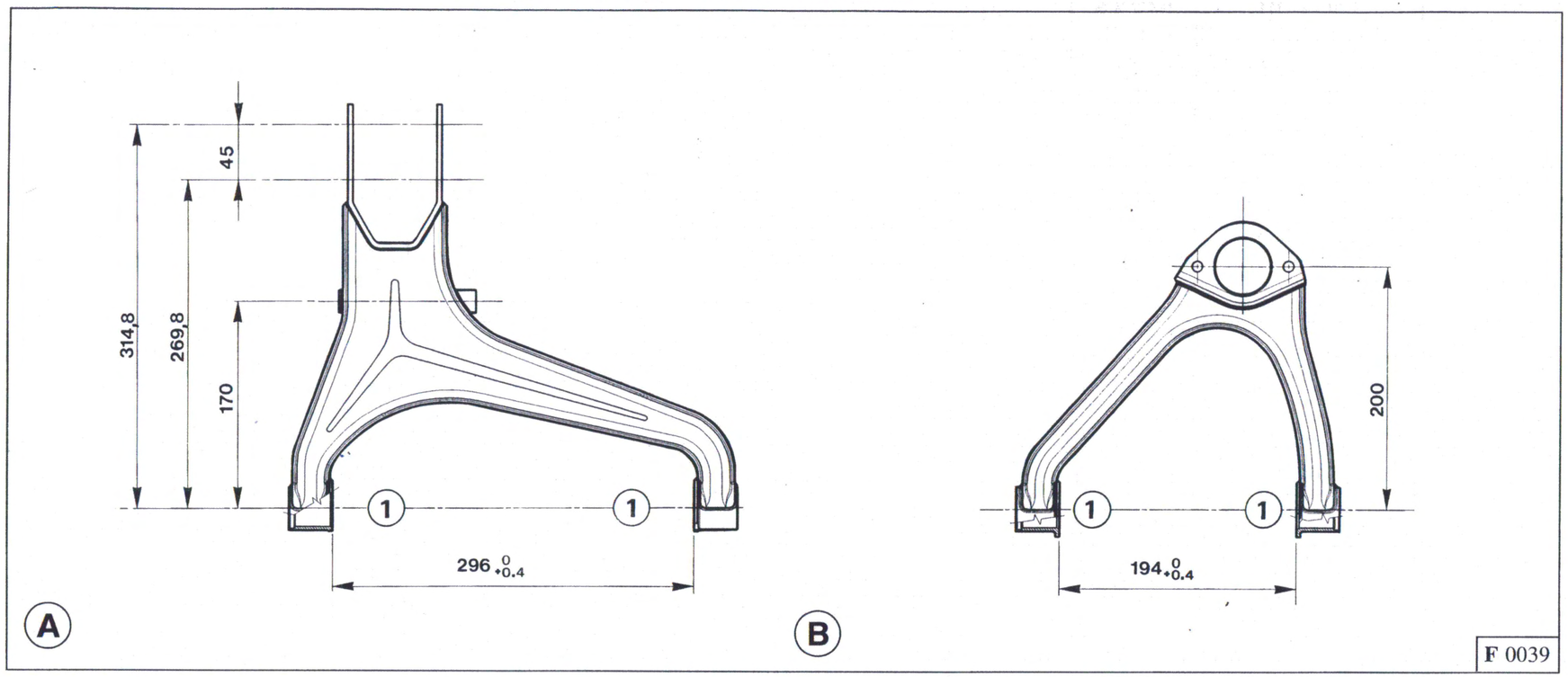

Fig. 4

A - Lower arm; **B** - Upper arm.

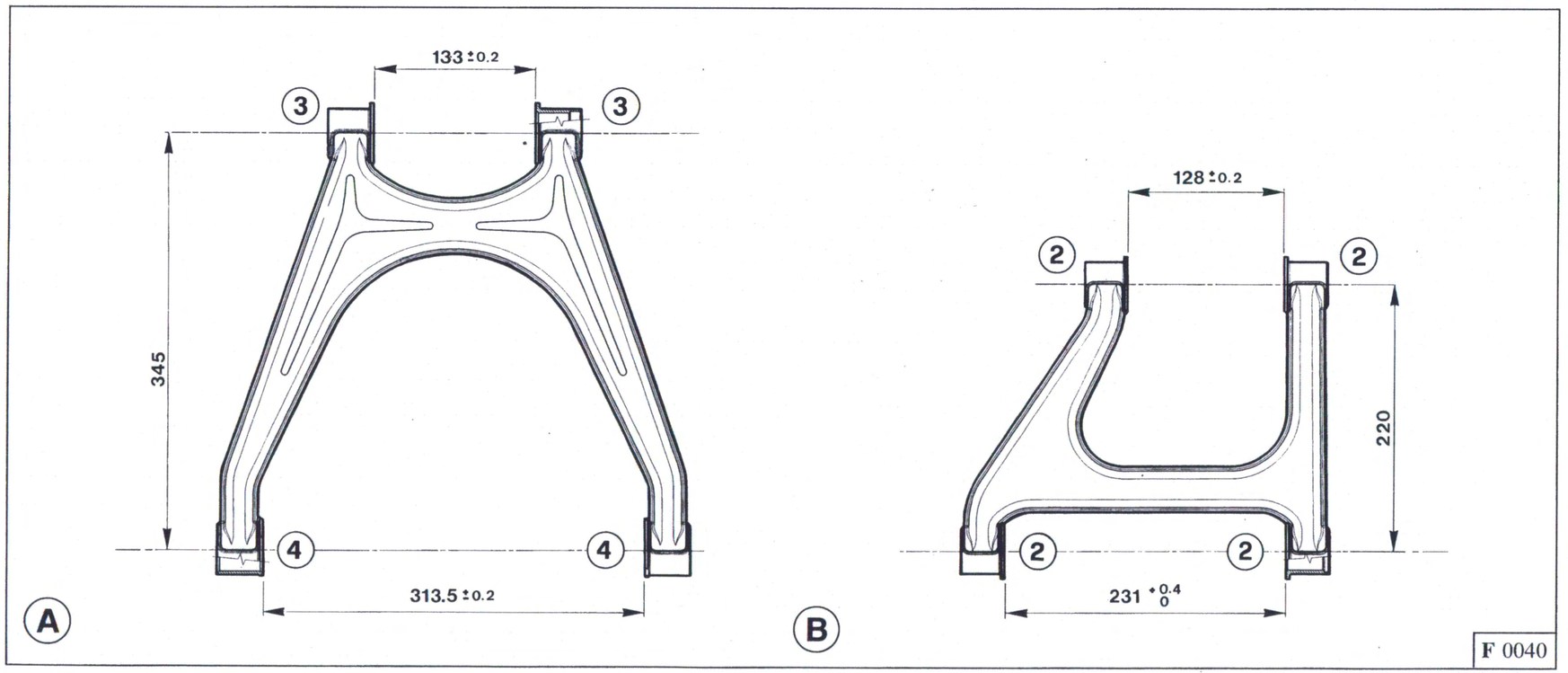

Fig. 5

A - Lower arm; **B** - Upper arm.

WHEEL BEARING REPLACEMENT

Front wheel bearings (Fig. 6)

Front bearings should not display end float.

If end float is found to be greater than 0.011 in (0.03 mm) or free play is greater than 0.0078 in (0.02 mm), replace the bearings as follows:

— remove the wheel;

— remove the caliper, unloosen the fastening screws **9** and remove the brake disc **8**;

— remove the four **2** screws retaining the bearing **1** from inside the stub axle; then remove the sealing cap **4**;

— remove the bearing with the toothed wheel **5**;

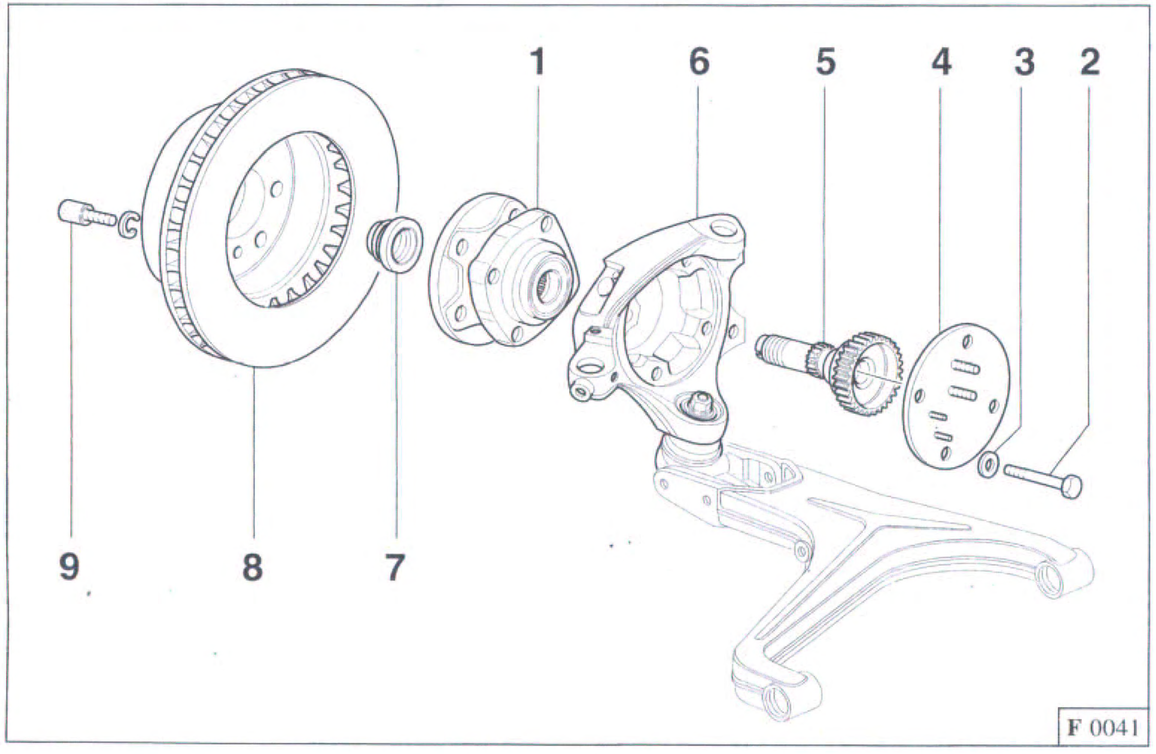

Fig. 6 - Front bearings

1 - Bearing;
2 - Bolt;
3 - Washer;
4 - Cap;
5 - Pin with toothed wheel;
6 - Stub axle;
7 - Nut;
8 - Brake disc;
9 - Screw.

— remove the pin with toothed wheel **5**;
— replace bearing **1**;
— insert pin with toothed wheel **5** in the bearing;
— replace and tighten middle nut **7** at a torque of 275 Nm;

— fit the bearing on the stub axle **6**;

— lock the four screws **2** at 70 Nm;

— fit the brake disc and tighten at a torque of 15 Nm through the screws **9**;
— check the gap of the ABS sensor;

— fit the caliper once again, by locking the screws at a torque of 63 Nm;

— fit the wheel once again.

Rear wheel bearings (Fig. 7)

— Remove the wheel;
— remove the caliper, unloosen the fastening screws **9** and remove the brake disc **8**;
— unloosen the nut **7**;
— remove the four screws **2** locking the bearing **1** from inside the hub-holder;

— replace the bearing **1** and tighten the four screws **2** at 70 Nm;
— replace and tighten middle nut **7** at a torque of 275 Nm;

— check the gap of the ABS sensor;

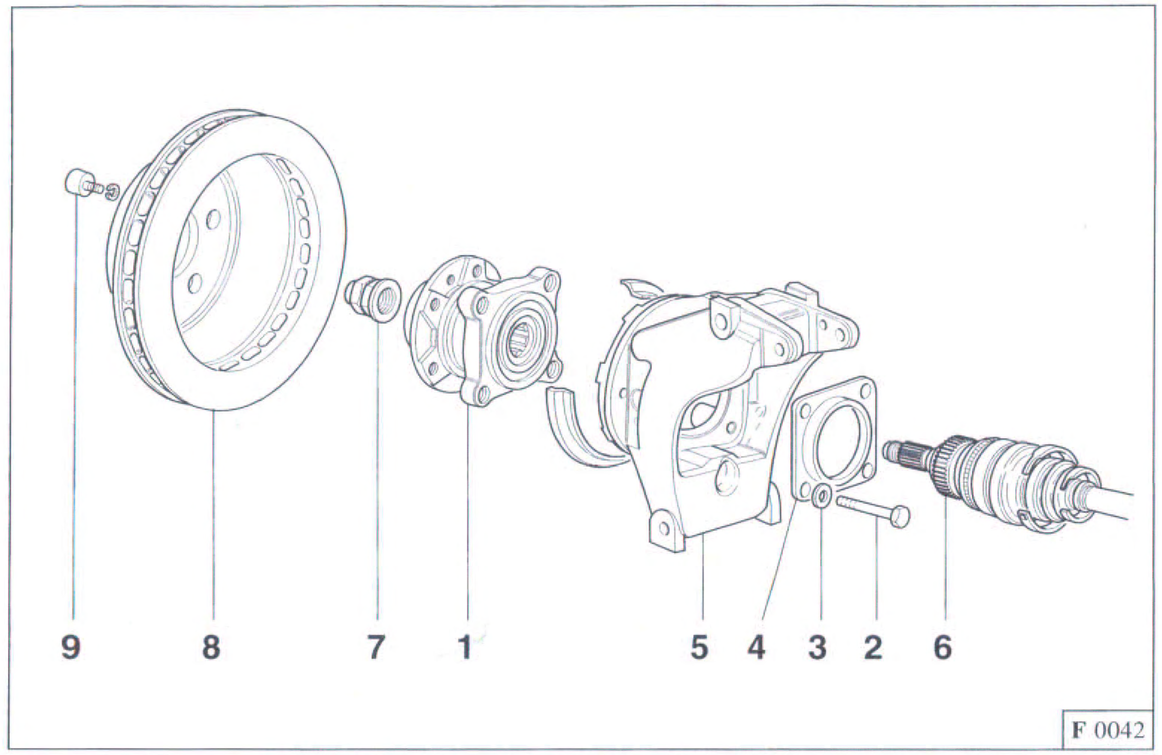

Fig. 7 - Rear bearings

1 - Bearing;
2 - Screw;
3 - Washer;
4 - Platelet;
5 - Hub carrier;
6 - Pin with toothed wheel;
7 - Nut;
8 - Brake disc;
9 - Screw.

— fit the brake disc **8** and tighten at a torque of 15 Nm through the screws **9**.
— fit the caliper once again, by locking the screws at a torque of 63 Nm;

— fit the wheel once again.

SHOCK ABSORBER ADJUSTMENT

Adjustable washer **1** (Fig. **8**) may be used to obtain the same shock absorber heights (with applied load) even when springs having different colour categories.

Adjust height **"L"** between washer and the middle of the lower shock absorbers eye according to the following table:

Front Spring		
Part No.	**"L"** mm	Spring colour
124982	**132,03 ± 0,5**	Red
	134,57 ± 0,5	No colour
	137,1 ± 0,5	Yellow

Rear Spring		
Part No.	**"L"** mm	Spring colour
151882	**152,52 ± 0,5**	Red
	154,15 ± 0,5	No colour
	155,78 ± 0,5	Yellow

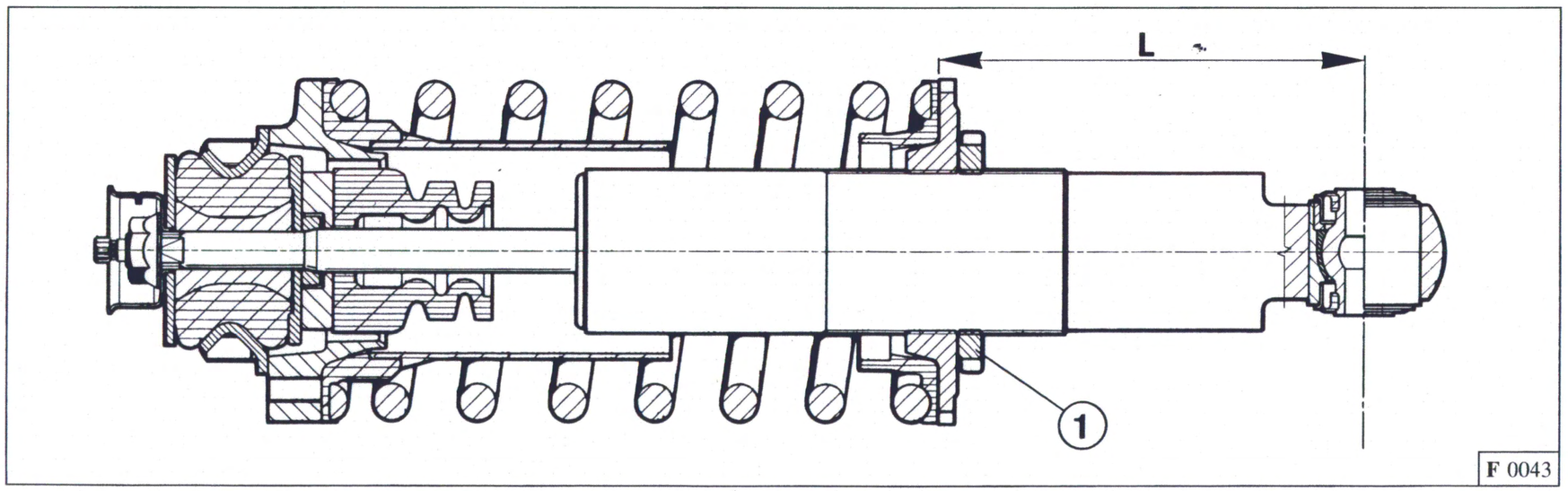

Fig. 8 - Shock absorber adjustment height
1 - Shock absorber height adjustment washer.

CHECKING AND ADJUSTING WHEEL GEOMETRY

Introduction

Before controlling the geometry, check:

— Tyre pressure;
— clearance between pinion and steering rack;
— clearance between ball joints and steering tie rods;
— efficiency of gas shock absorbers;
— clearance between stub axle and ball joints.

Alignment data	*Camber*	*Toe-in*	*Caster*	
Front	- 50' ± 10'	2,5 ± 0,5 mm	*Hydraulic power steering*	*Mechanical power steering*
Rear	- 2° ± 10'	2,5 ± 0,5 mm	7° ± 10'	5° ± 15'

— Place the car on level, with a "static" load; then simulate on front seats the passengers' weight, using sand sacks having an approximate weight by 165.3 lb (75 kg) each seat.

Ground clearance			
Front	162 ÷ 171	Rear	182 ÷ 191

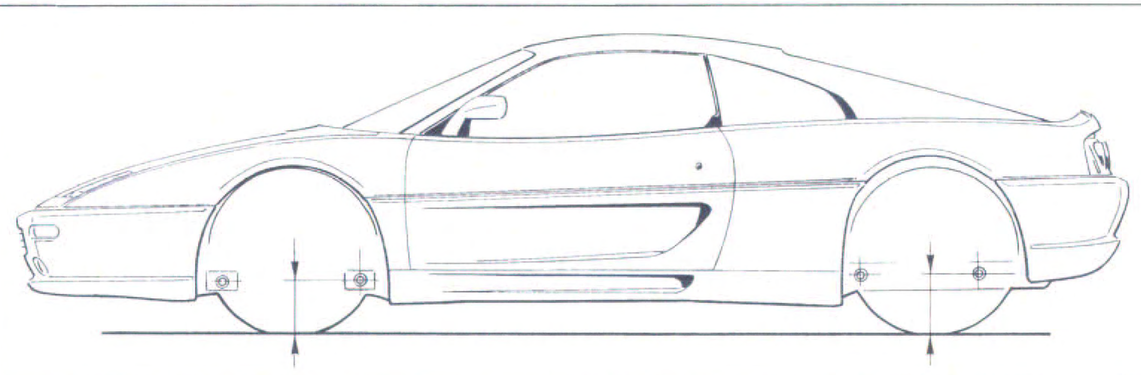

Wheel camber (Fig. 9)

— Check that lower suspension arms are in the correct position

— If positions are found not to be as specified, alter the number or thickness of spacer washers **1**.

— Alter the thickness under both lower forks by the same amount in order not to deform the suspension.

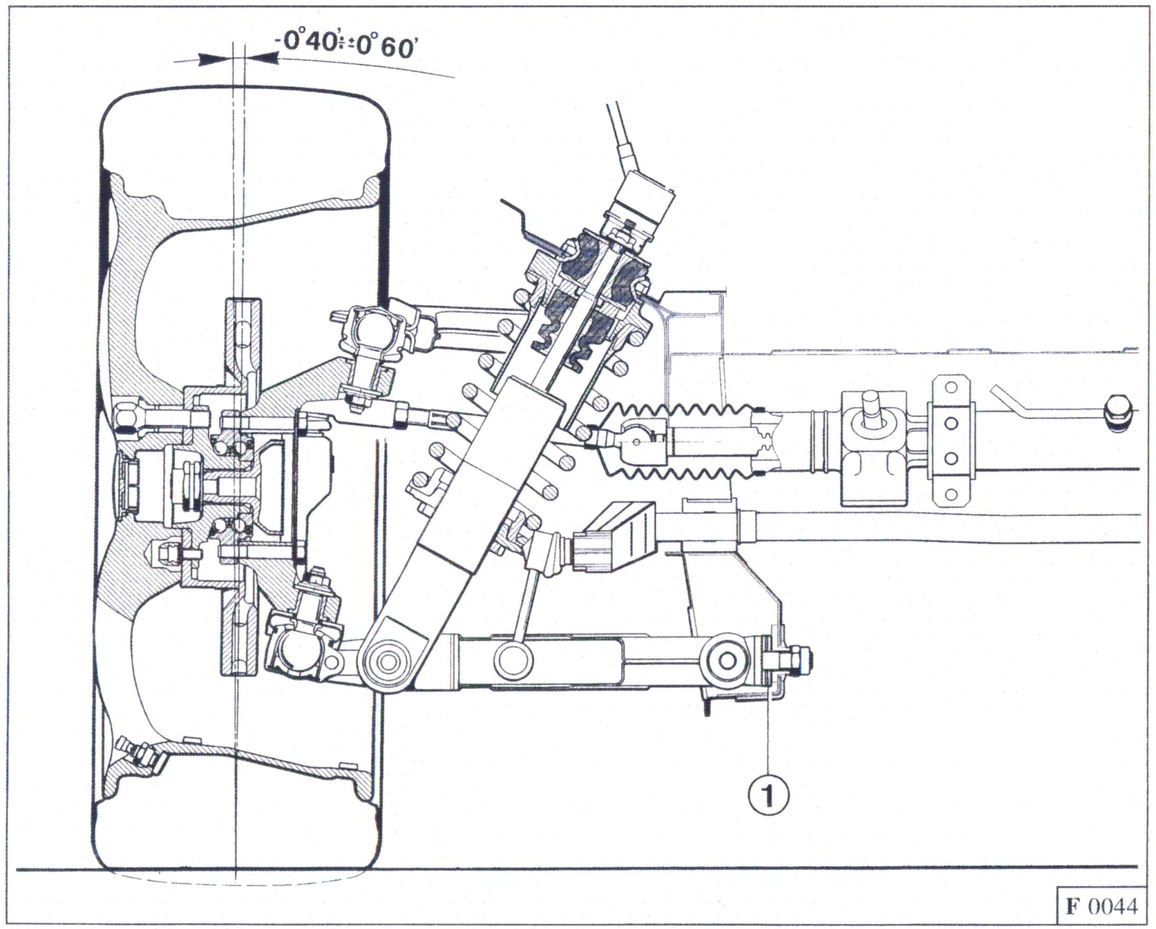

Fig. 9 - Front wheel camber
1 - Spacer.

Toe-in (Fig. 10)

If toe-in is found not to be within the required values, proceed as follows:

— make sure the steering box is in central position and the steering wheel is exactly horizontal. The two side tie-rods should be of equal length in this position. If not, adjust.

— Slacken lock nuts **2** of the ball joints on the side tie-rods. Alter the length of the tie-rods by the same amount until the exact toe-in is obtained.

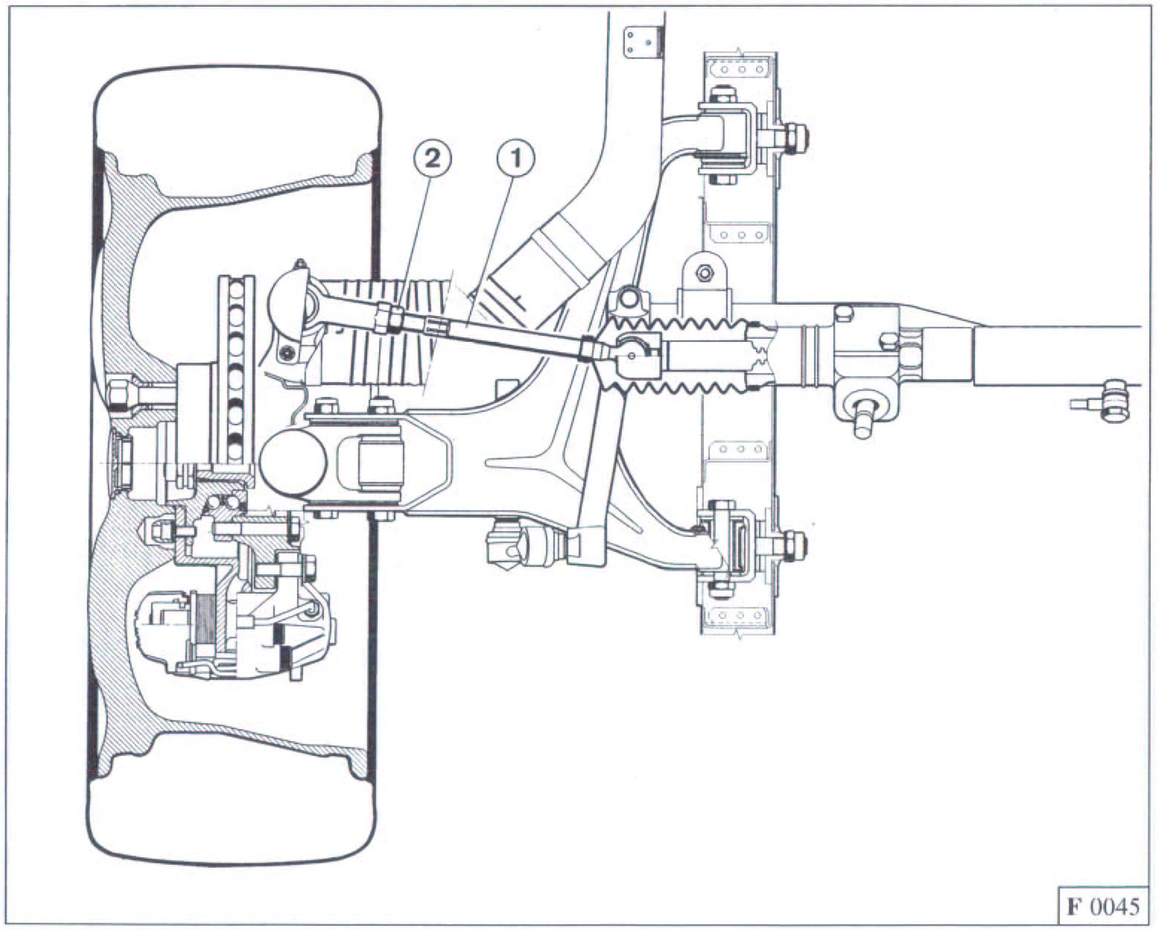

Fig. 10 - Front wheel toe-in

1 - Tie-rod;
2 - Lock nut.

Caster angle (Fig. 11)

— The caster angle value varies depending on the power steering type - mechanical or hydraulic - and it's shown in the table below.

— If the angle is found to be different, adjust spacer washers **1** by moving some from one side of the ball joint to the other until the required value is obtained.

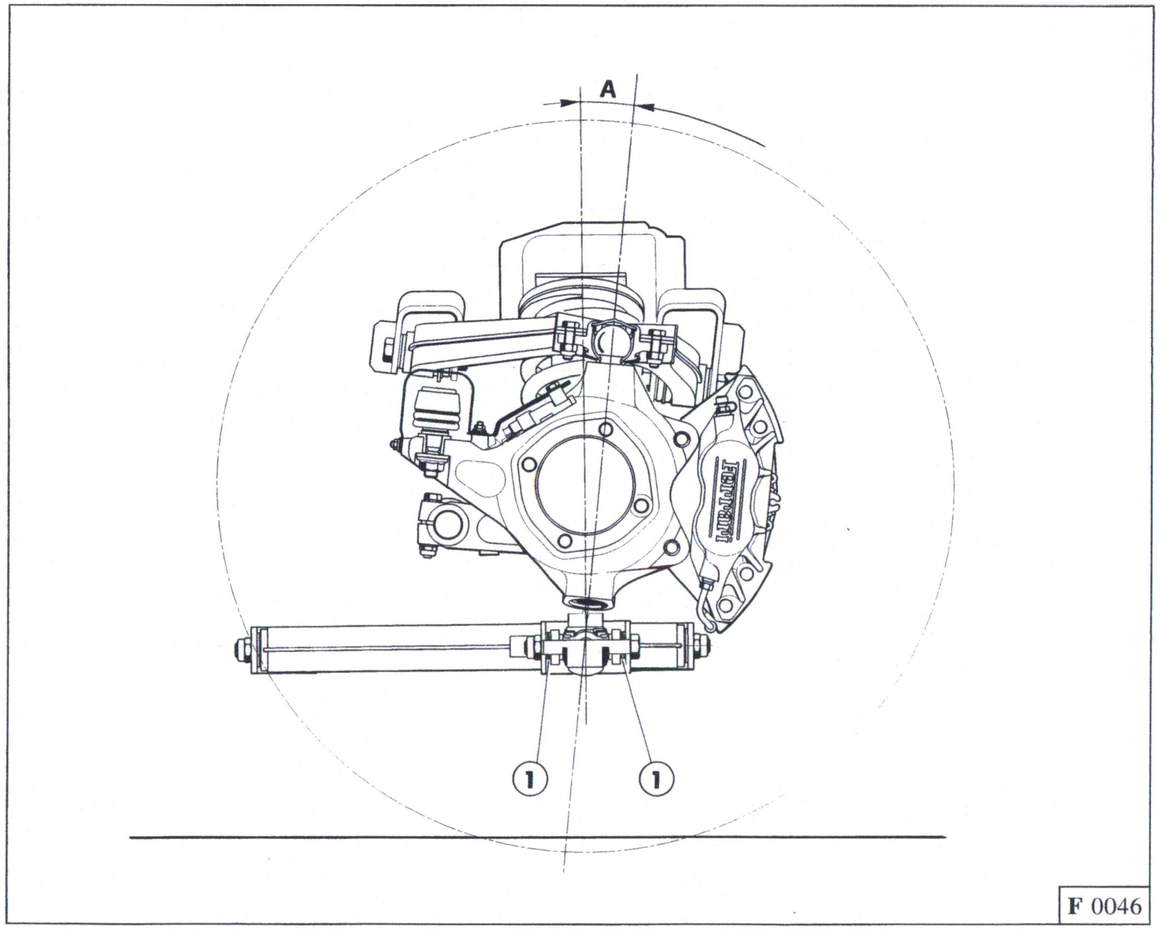

A	
Hydraulic power steering	**Mechanical power steering**
7° ± 10'	**5° ± 15'**

Fig. 11 - Caster angle
1 - Spacer shims.

Kingpin angle (Fig. 12)

— The kingpin angle should be 13° 16'.

— This cannot be adjusted because it is set during manufacture.

— The sole purpose of the check is to ensure that the stub axle has not been deformed as a result of a collision.

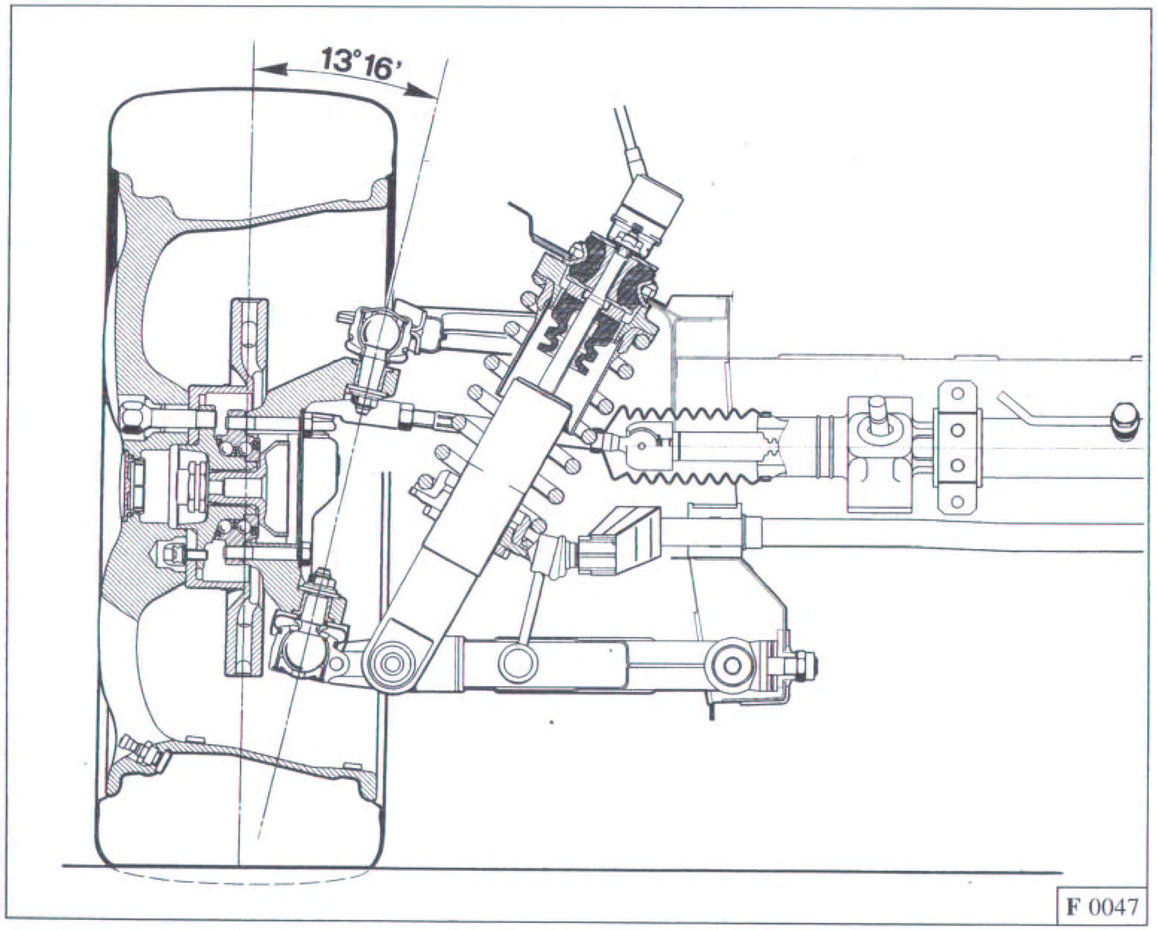

Fig. 12 - Kingpin angle.

Camber (Fig. 13)

— If the measurements are not within specified limits, the camber must be adjusted.

— Adjust by altering the number or thickness of spacer washers **1** on the lower arm forks.

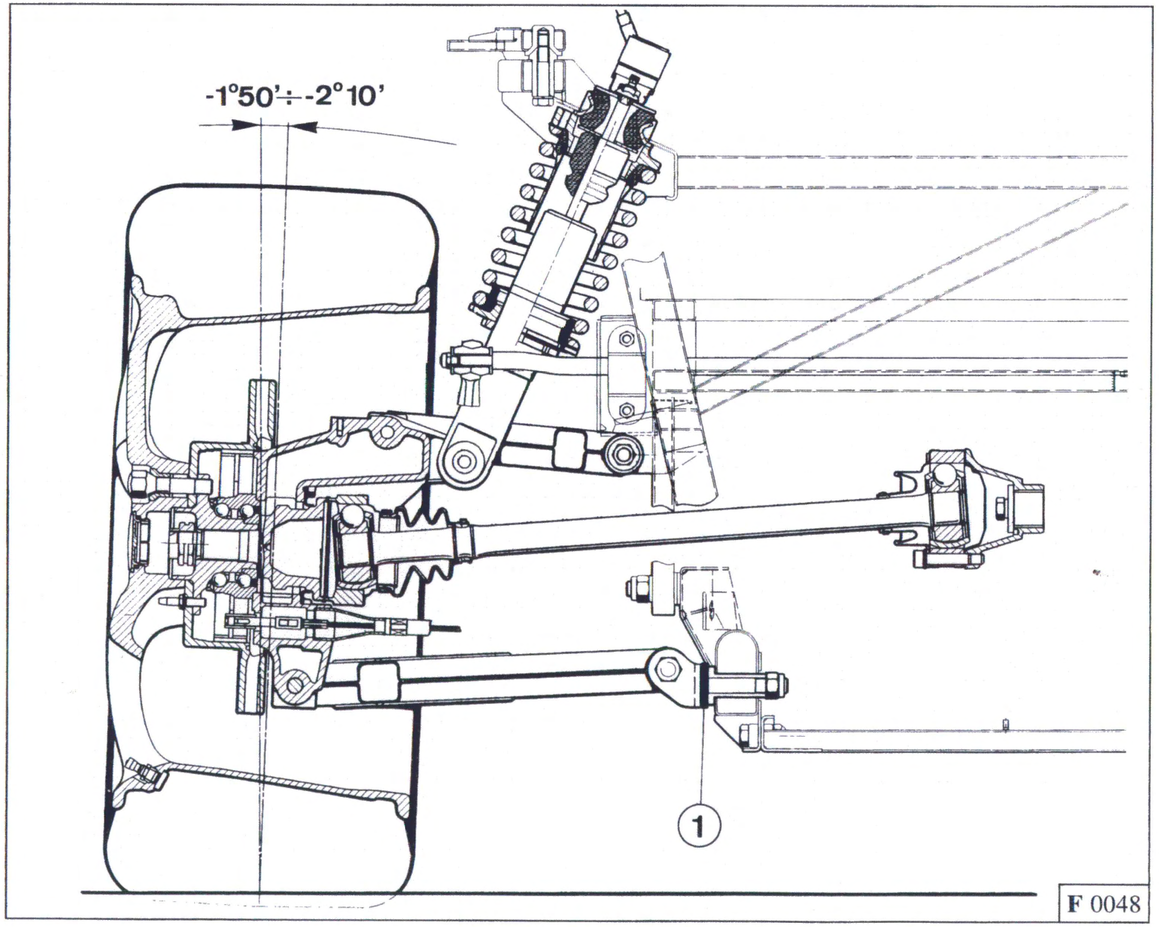

Fig. 13 - Rear wheel camber.

Toe-in (Fig. 14)

— Check that the toe-in value is between 2.5 ± 0.5 mm.

— If necessary, adjust by altering the number and thickness of washers **1**.

Note:
always adjust the front and rear fork shims simultaneously so as not to alter the camber angle.

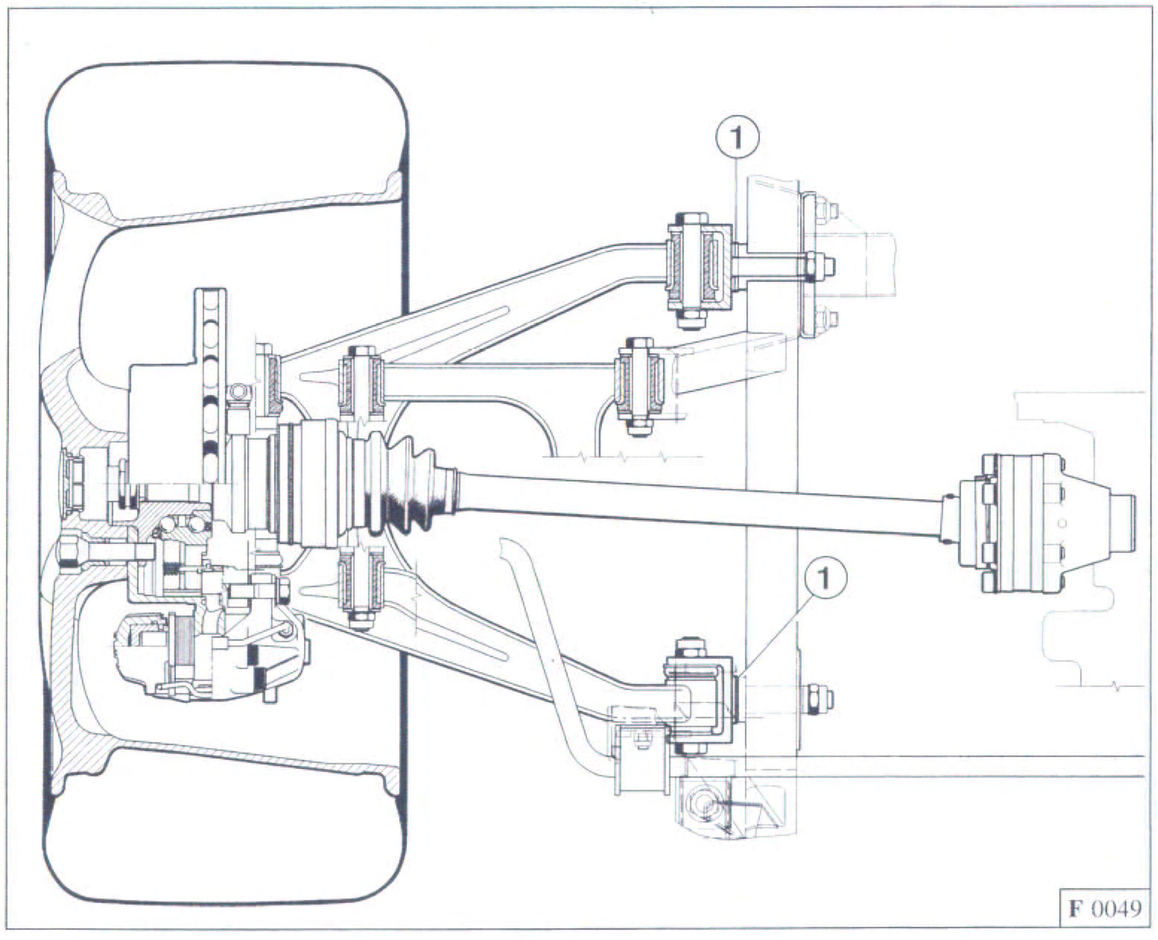

Fig. 14 - Rear wheel toe-in.
1 - Spacer washers.

SHOCK ABSORBERS

The shock absorbers are double- acting and direct because they act on the suspension without any intervening linkage.

Rubber bumpers fitted onto the rods at the top of both units prevent shaking of the suspension topping.

Flexible blocks inside front and rear shock absorbers prevent shaking from bottom.

Front Shock Absorbers			
Part No.	Type	Max. expansion	Shock absorber stroke
157633	BILSTEIN	388 ± 3 mm	109 ± 3 mm

Rear Shock Absorbers			
Part No.	Type	Max. expansion	Shock absorber stroke
157634	BILSTEIN	395 ± 3 mm	119 ± 3 mm

Note: when measuring the shock absorber typical curve, the tolerance is ± 10 + 30 N, min 50 N over the entire curve.

Note: shock absorbers cannot be adjusted.
Height alone may be adjusted by altering the position of the washer.

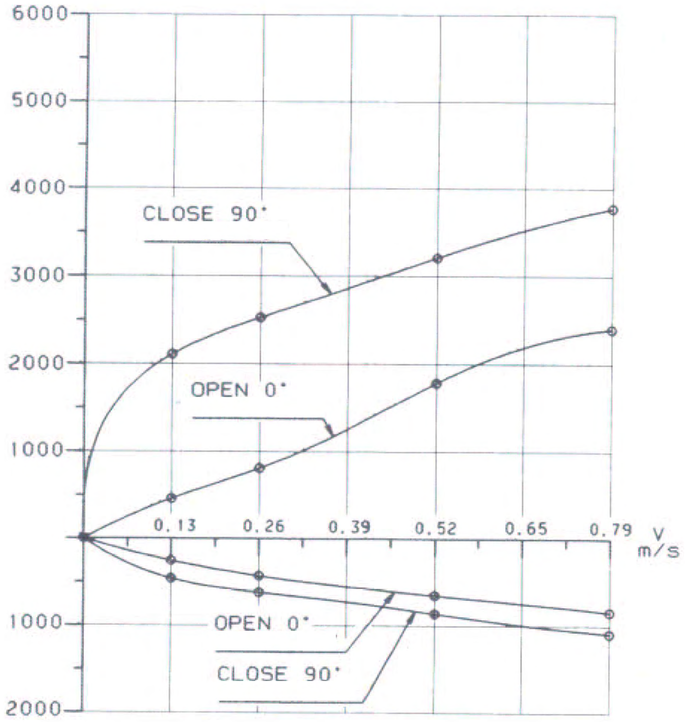

F 0050

Rod	Expansion		Compression	
V = m/s	N		N	
	Opened - 0°	Closed - 90°	Opened - 0°	Closed - 90°
0,13	40	185	20	35
0,26	70	263	35	60
0,52	165	330	55	80
0,79	215	380	76	100

Fig. 15 - Graph for front shock absorber features.

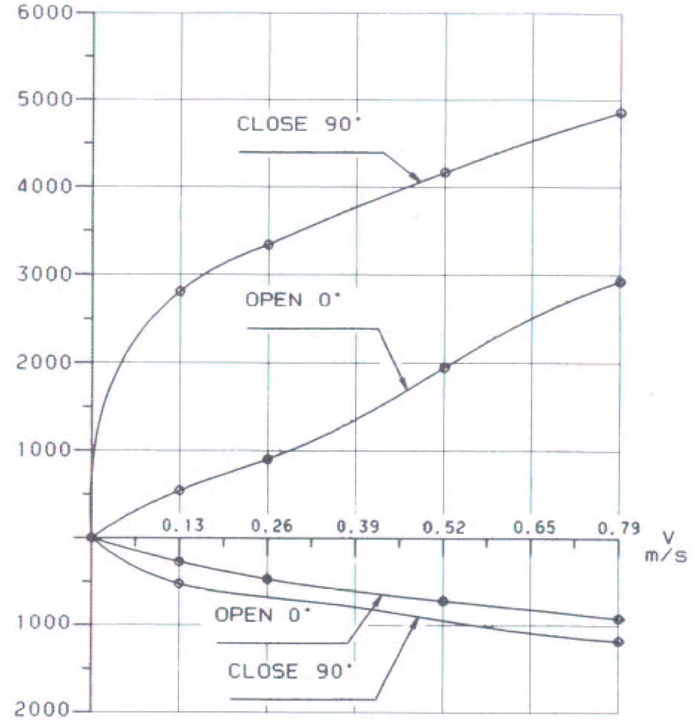

F 0051

Rod	Expansion		Compression	
m/s	N		N	
	Opened - 0°	Closed - 90°	Opened - 0°	Closed - 90°
0,13	500	2930	200	300
0,26	800	3330	300	400
0,52	1720	4350	450	600
0,79	2720	5050	620	800

Fig. 16 - Graph for rear shock absorber features.

SPRINGS

Springs are divided into three categories according to their load. These are marked by a coloured coil.

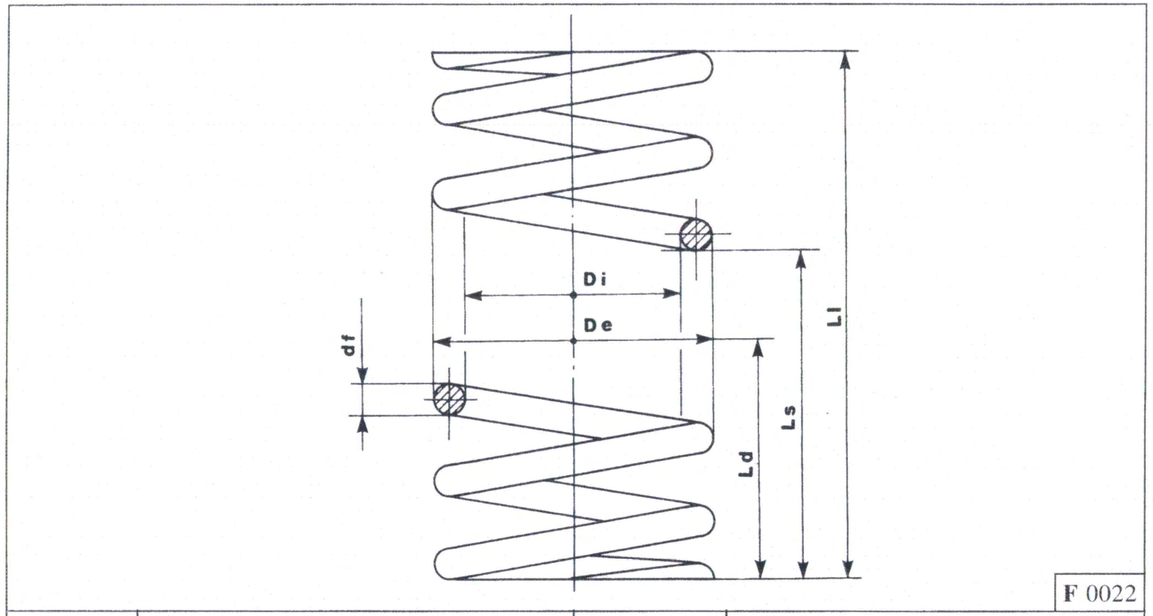

Ll	Free length	**Ld**	Length with dynamic load
Cs	Static load	**df**	Wire diameter
Ls	Length with static load	**de**	Spring outer diameter
Cd	Dynamic load	**φm**	Flexibility mm/N coil direction

Fig. 17 - Spring specifications.

			Front	Rear
			124982	**151882**
Ll	=	mm	318	251
Cs	=	N	4071 ± 122	4383 ± 131
Ls	=	mm	189,40	153
Cd	=	N	5833 ± 175	6898 ± 207
Ld	=	mm	133,90	96,50
df	=	mm	11,50	12
de	=	mm	101,50 ± 1,01	104,6 ± 1
φm	=	mm/N	0,3087	0,2202
Colour categories			**Cs**	
Yellow		N	3948 ÷ 4030	4251 ÷ 4339
No Colour		N	4030 ÷ 4113	4339 ÷ 4427
Red		N	4113 ÷ 4193	4427 ÷ 4561

VARIABLE-SETTING SHOCK ABSORPTION

Introduction

This system provides optimum shock absorber settings in all driving conditions to provide optimum road holding.

The system is composed of light alloy gas shock absorbers with setting continuous variation controlled by electronically managed servo-reducers.

The absorption electronic management is subdivided into two programs, that can be selected by the user, with several car behaviour features.

The Electronic Control Unit (ECU) selects the shock absorber setting according to speed, acceleration and selection of the type of driving and by some sensors controlling the car utilization conditions.

The ECU controls the adjustment of the shock absorber setting principally according to the sensor information and secondly according to the car speed.

The driver can choose one of the following two settings: comfort and sport.

- **Comfort:** this setting offers comfort and is therefore designed for tour driving on roads such as motorways.

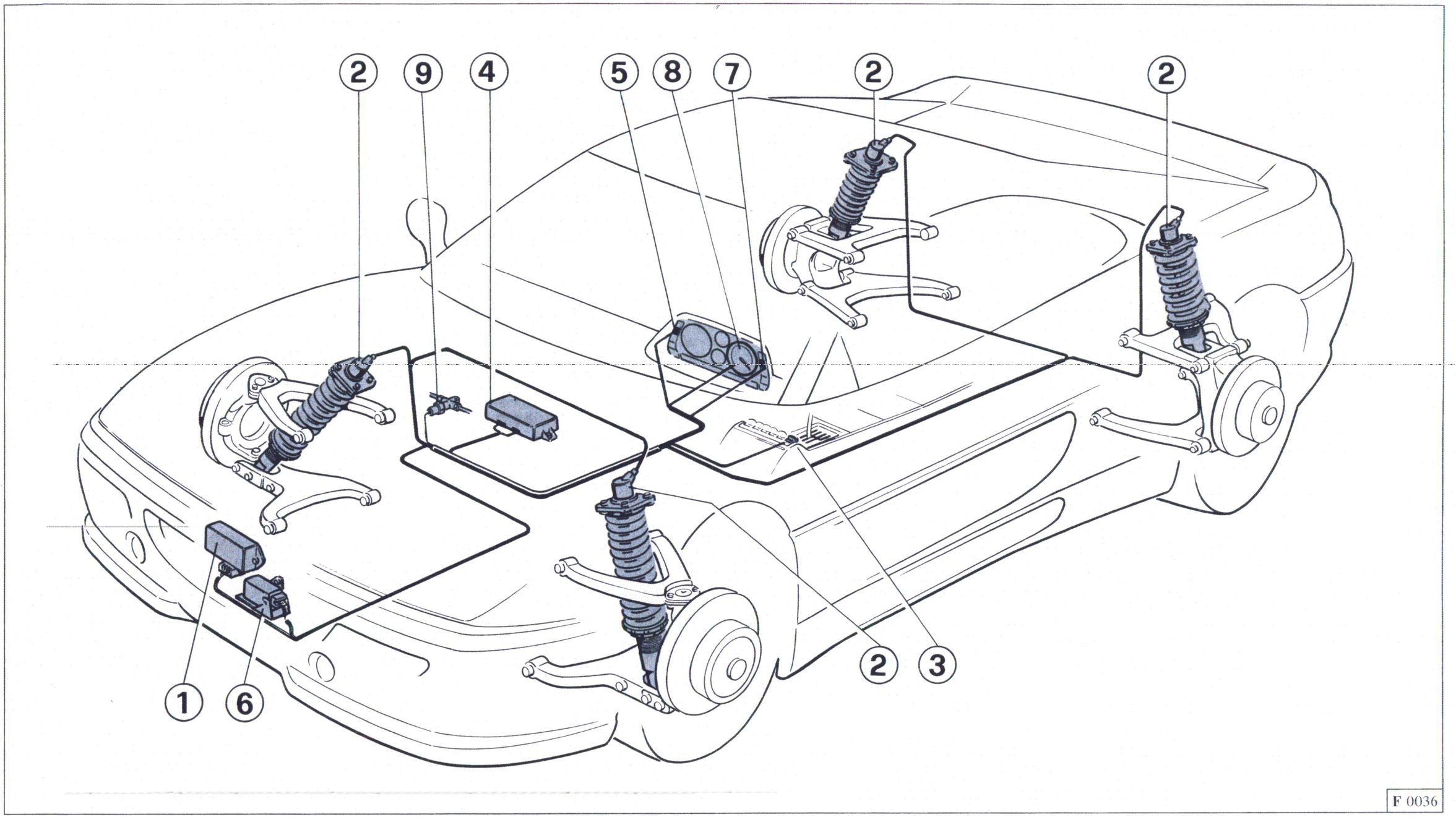

Fig. 17 - Variable-setting suspensions adjustment system

1 - Vertical acceleration sensor; **2** - Actuator; **3** - Selector switch; **4** - Electronic control unit; **5** - Fault warning light; **6** - Horizontal acceleration sensor; **7** - Comfort suspension setting indicator; **8** - Speedometer signal; **9** - Pressure gauge.

• **Sport:** selecting the hard position the shock absorbers are managed like in a sports-type setting (very useful in circuit driving).

The ECU controlling the operation of the system has two different shock absorber setting programmes stored inside it, one for each position of the selector switch.

The system is controlled through the rotation of the actuators fitted to the shock absorbers (Fig. **17**, no. **2**).

These actuators are electric motors designed to move in both directions depending on the control signal sent by the ECU.

SYSTEM OPERATION

When the system is switched on (ignition key ON), the four actuators are controlled to make one complete revolution in both directions, after the starting check.

This operation enables the ECU to check the correct operation of the actuators, detecting conditions of "motor lock" or "bad position".

Depending on the vehicle speed and the position of the selector switch, the ECU adjusts the shock absorber setting following one of the two programmes shown in the graph of Fig. **18**.

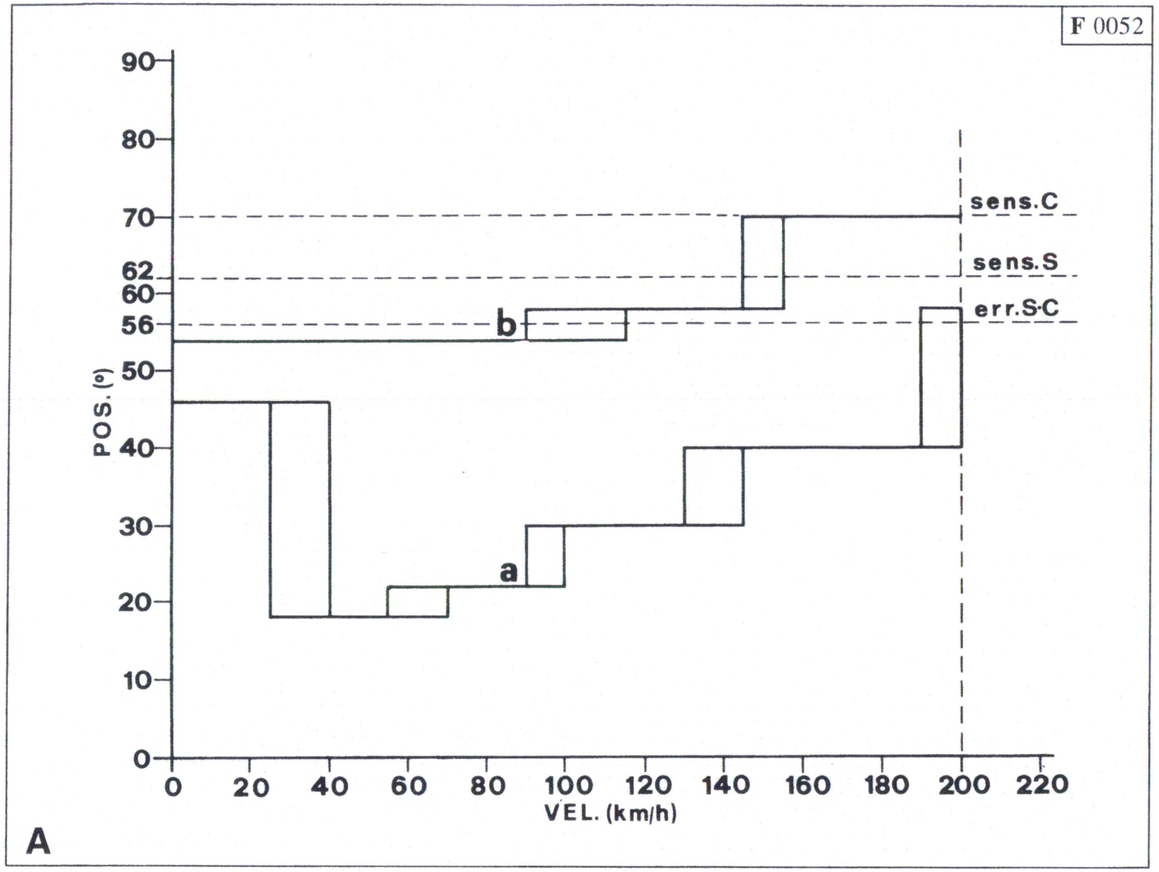

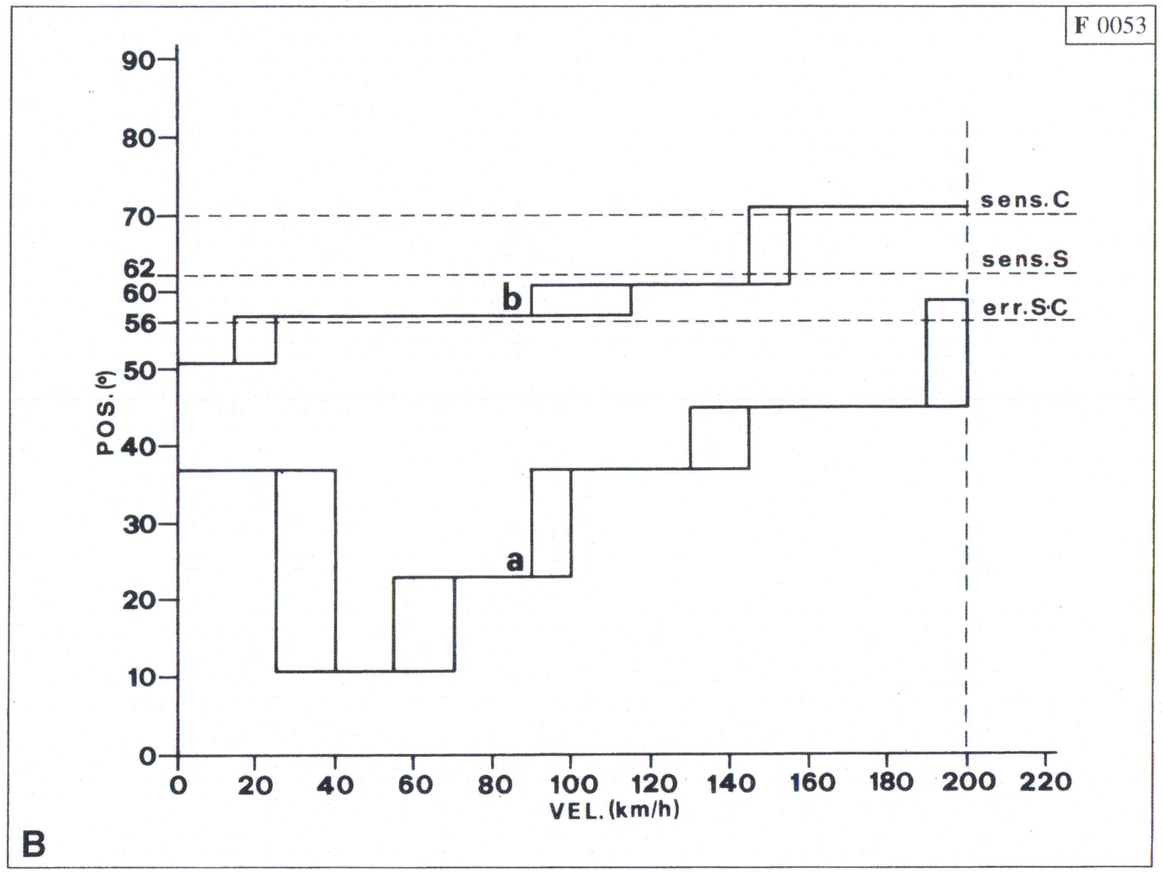

Fig. 18 - Adjustment programmes stored in the ECU

A - Front shock absorbers;
B - Rear shock absorbers;
a - Comfort setting;
b - Sport setting.

SYSTEM COMPONENTS

The system incorporates the following components:

1 - variable-setting shock absorbers;

2 - electrical actuators with integral movement sensor;

3 - vehicle speed sensor;

4 - two-position selector switch;

5 - vertical acceleration sensor;
6 - horizontal acceleration sensor;

7 - brake circuit pressure switch;
8 - fault warning light;
9 - connection with the Diagnosis System SD-1;
10 - comfort suspension setting indicator.

1 - Variable-setting shock absorbers

A rotating rod is fitted inside the absorber stem.

The end of the rod incorporates a toothed crown which allows the actuator to be fitted.

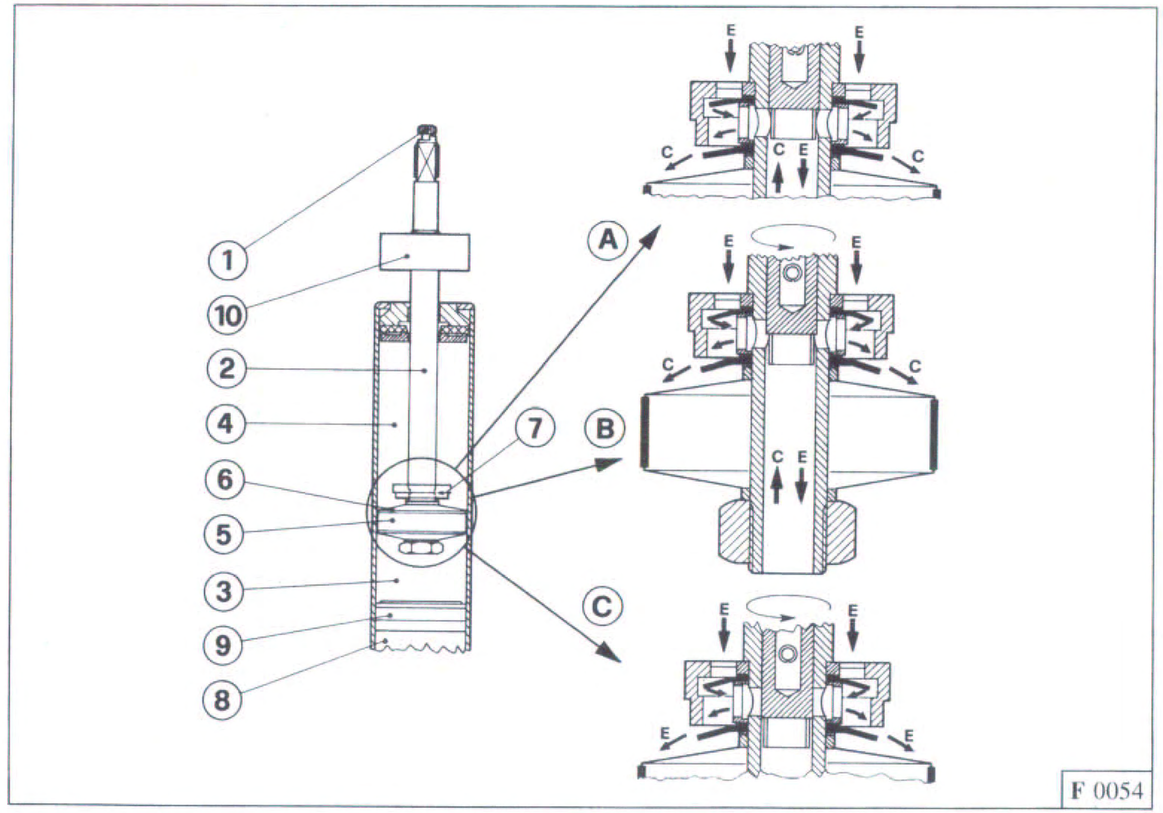

Fig. 19 - Variable-setting shock absorber

1 - Toothed crown for actuator;
2 - Stem;
3 - Lower chamber;
4 - Upper chamber;
5 - Disc;
6 - Flexible washer;
7 - By-pass valve;
8 - Area with gas;
9 - Floating disc;
10 - Buffer.

The oil contained in the lower chamber can flow into the upper chamber and viceversa through the holes in the moving disc and through the by-pass valve which is regulated by the turning of the rotating rod controlled by the ECU.

As shown in Fig. **19**, when the shock absorber is compressed, oil flows from the lower to the upper chamber through the holes on disc **5** and the resulting bending of washers **6**, and also through the by-pass valve **7**, the position of which is controlled by the ECU.

The examples shown in cases **A**, **B** and **C** in Fig. **19** illustrate the flow of compressed and expanded oil with the by-pass valve fully open, (case **A**), at an intermediate position, (case **B**), and fully closed, (case **C**).

In the first case most of the oil flows through the valve reducing the function of washers **6**; this provides for the softest shock absorber setting.

When the by-pass valve is fully closed (case **C**) most of the oil flows through the holes controlled by washers **6** and provides for the hardest shock absorber setting.

The pressurised gas in the lower chamber **3** for the front shock absorber and in the accumulator for the rear shock absorber - limited by the floating disk **9**, pressurizes the oil for avoiding emulsions and compensates inner volume

variations due to the shock absorber stem movement.

The basic shock absorber setting is due to flexible washers, Fig. **19** no. **6**, and cannot be changed.

It is hence possible only to control the values of this setting with the valve fully open and fully closed and to check whether the curves measured fall within the specific curves for the shock absorbers shown in Fig. **15** and **16**.

Note: with the ignition key ON and the vehicle stopped, the actuators are positioned so that the by-pass valve is fully open, regardless of the selector switch position.

2 - Electrical actuators with integral movement sensor

The system actuators are electric motors controlled directly by the ECU with a signal whose polarity determines the direction of rotation.

The motor is connected to a Hall effect sensor which sends a variable signal to the ECU during the movement stage of the motor.

The graph in Fig. **20** illustrates qualitatively the signals sent by this sensor to the ECU.

It shows how the duration of this signal is linked to the duration of the control set by the ECU; according to the signal timing, the motor rotation direction can be determined.

Note: when removing or replacing one of the actuators, be very careful with the connection to the shock absorber stem. The connection is correct when the actuator retaining ring fits fully into the seat (three slots).

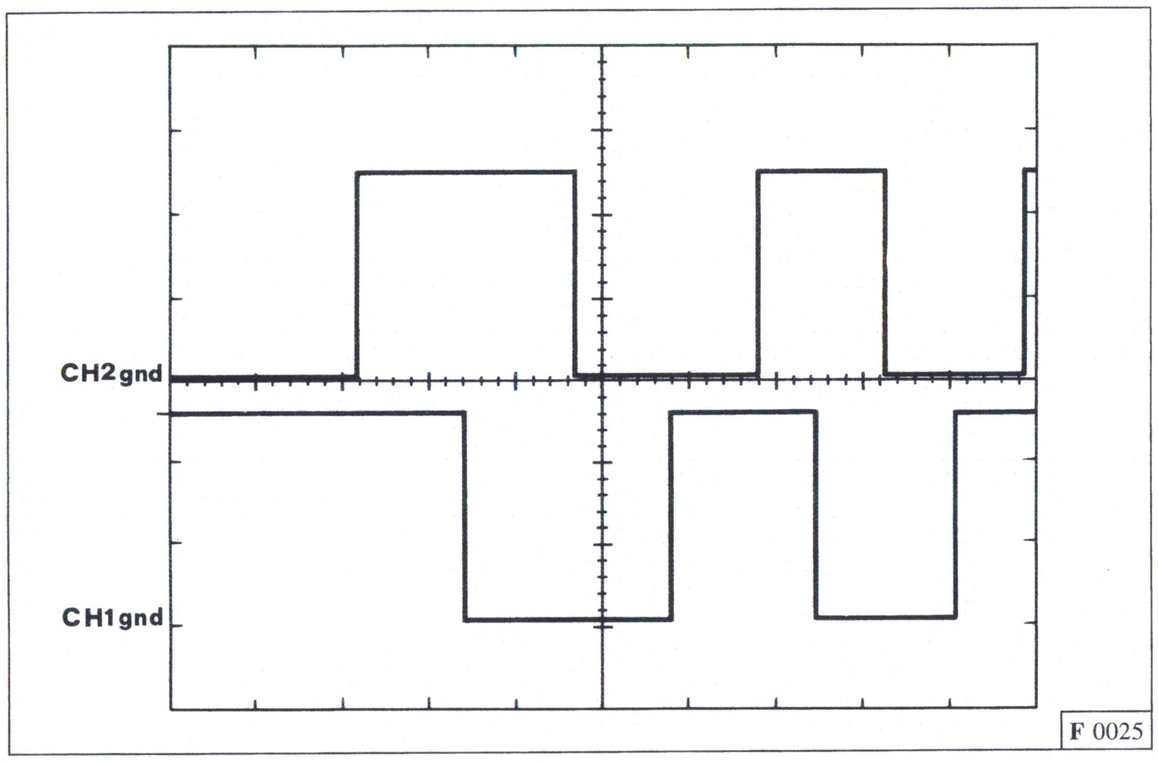

Fig. 20 - Signal generated by the movement sensor.

3 - Vehicle speed sensor

The speed sensor is like the one used to control the speedometer and is located on the gearbox.

By this signal, the ECU recognizes, while the speed increases, a driving difficulty increase, so that the shock absorbers are gradually stiffened.

The system checks this signal: if the key is turned ON with or without starting the car, the ECU makes a time-out of about 1 minute, after which a situation of "speedometer signal lack" is detected; the ECU detects an anomaly and the warning light switches on; when the speedometer signal is detected, the warning light goes off.

It generates a square wave whose frequency changes with the variation in speed.

4 - Two-position selector switch

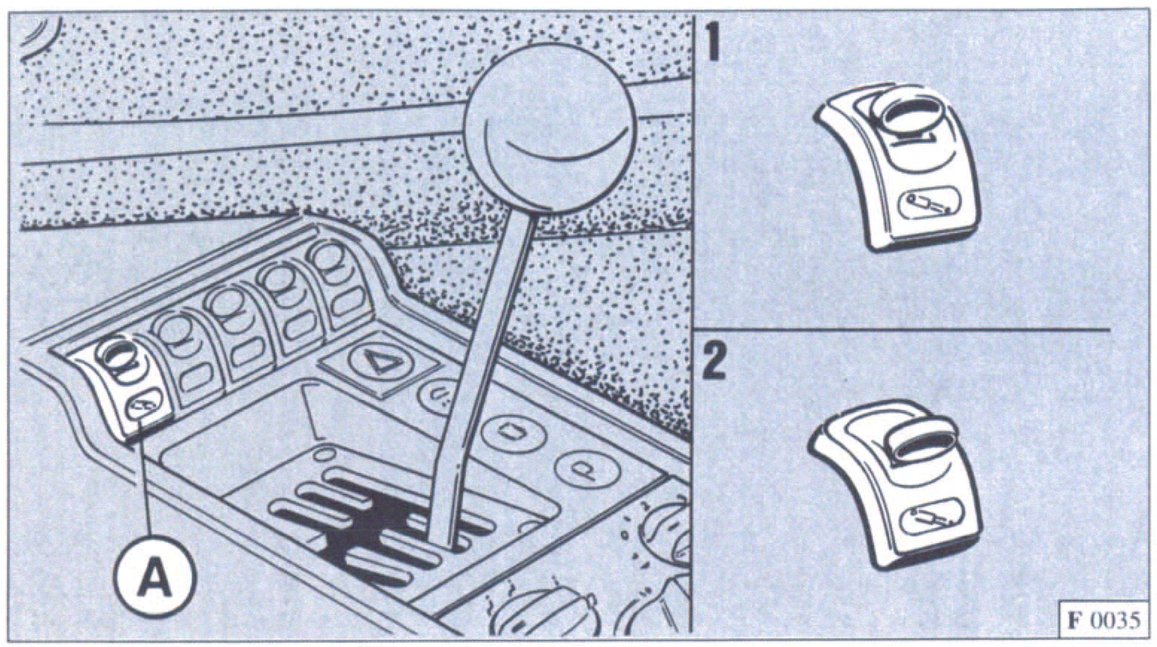

Fig. 21 - Selector switch

A - Switch;
1 - "Sport" position;
2 - "Comfort" position.

This is located on the central tunnel of the vehicle, Fig. **21**, and is used to select one of the two driving settings.

5 - Vertical acceleration sensor

It is an acceleration sensor with signal filtering circuits, for distinguishing the car vertical swinging intensity and frequency; the ECU detects a shock absorber stiffening signal with vertical accelerations lower and lower as the car speed increases, so as to avoid unwished car vertical swinging.

6 - Transversal acceleration sensor

This sensor is formed by two leading surfaces; the lower one is tapered and the cone bottom houses a ball.

When the acceleration of the ball exceeds 0.3 g, it makes the lower surface touch the upper one.

When the car is submitted to longitudinal accelerations (start or braking), transversal (bends) or both (braking during bends) over 0.3 g, the contact inside the sensor is closed.

The ECU uses this signal to harden the actuator motors suitably.

7 - Brake circuit pressure switch

It is calibrated at a value over which the ECU recognizes the condition of car deceleration and controls a stiffening, reducing the forecarriage lowering and the braking pitch swinging.

8 - Fault warning light

Is located on the central console and is actuated by the ECU whenever system irregularities are detected.

It is also actuated when the system is switched on for about 2 ÷ 3 seconds in order to check the system operation.

9 - Connection with the Diagnosis System SD - 1

A part of the system ECU memory is allocated to system fault diagnosis.

It is also designed for connection with the Diagnosis System SD-1.

10 - Comfort suspension setting indicator;

It is placed on the central instrument panel and it is on when the selection switch is on **"Comfort".**

The indicator simply shows the setting condition.

SYSTEM DIAGNOSIS

System operation is constantly monitored by the ECU which is able to recognise any malfunctions.

The errors that the ECU is able to detect are as follows:

1 - one or more actuators locked;

2 - one or more actuators not fitted or badly fitted;
3 - absence of speedometer signal;
4 - no contact on the selector switch;

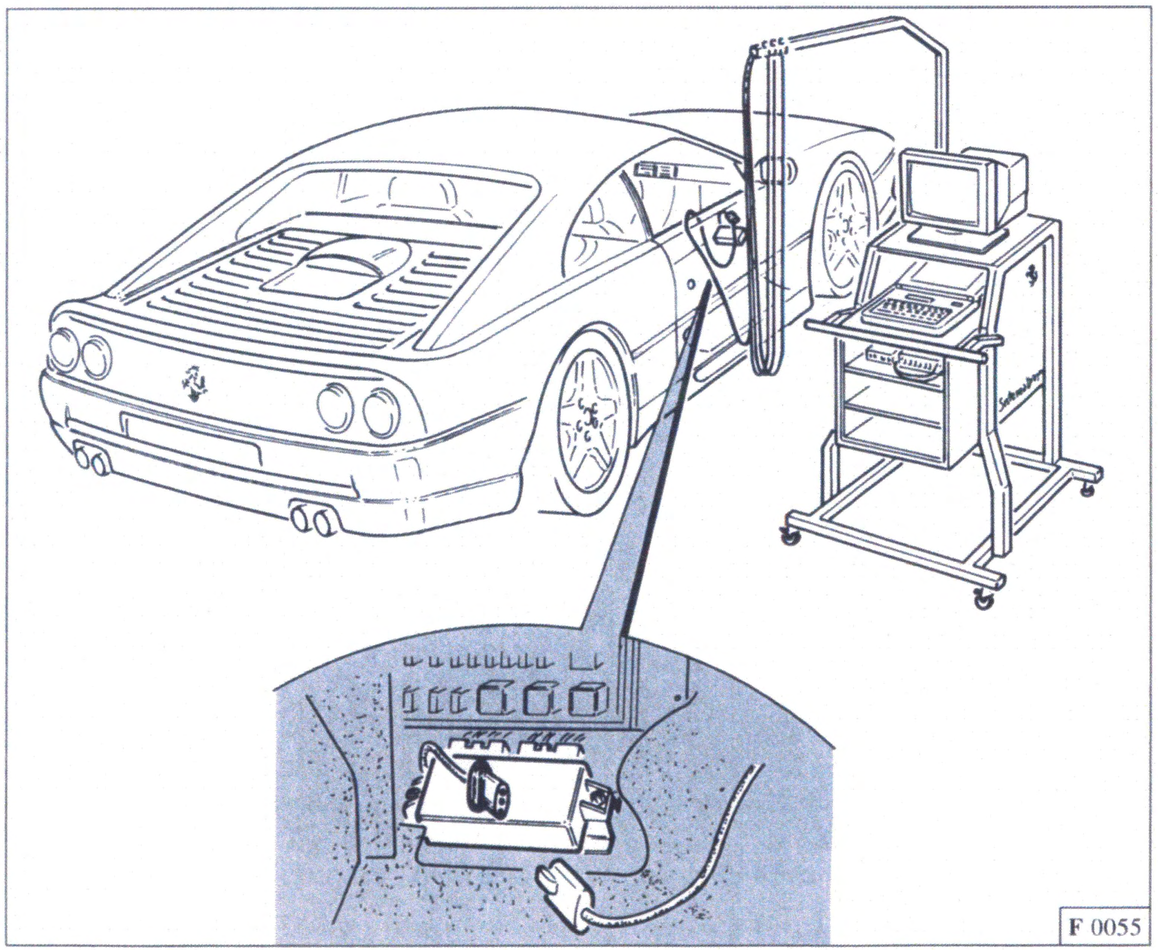

Fig. 22 - Diagnosis system SD-1 connection.

5 - selector switch with more than one earth contact;

6 - fault warning light with short or open circuit;

7 - braking system sensor not connected;

8 - acceleration sensor L or H line not connected.

These errors are stored permanently in the ECU even though they may occur only temporarily.

Note: the fault memory can be erased only using the Diagnosis System SD-1.

In the event of system malfunctions, which are stored inside the ECU, there is also a command to the warning light to come on (apart from when there is a fault with the warning light itself, which can be checked when the system is switched on).
At the same time the ECU controls the actuators to assume the failure mode position which is fixed at 56°.

It is clear that if the fault involves an actuator, then it will not be able to take up the position set by the ECU.

Conditions can hence be created where one of the four shock absorbers has a fixed setting.
In any case safe driving is always guaranteed.

If the fault is temporary and disappears when the system is next started, the warning light will not come on (apart from the initial check), although it will continue to be stored inside the fault

memory until it is erased by the Diagnosis System SD-1.

If the light comes on due to malfunction while the vehicle is being used, it is advisable to stop the car, remove the power supply to the ECU by turning the ignition key to STOP and then turn the key back to ON to switch it on again.

If the malfunction has ceased (e.g. false contact) the light will not come on again and the system will start to operate normally. If the fault is still present the system will remain in failure mode.

By using the Diagnosis System SD-1 in the trouble-shooting of this system, the aided diagnosis and the active diagnosis referred to the four motors, an automatic cycle and the Buffer function can be carried out, besides detecting possible errors.

Parameter display

The data that can be displayed are:

a - present and rated actuator values;

b - setting curve;
c - car speed;
d - horizontal acceleration sensor indication
e - braking in progress;
f - accelerometer indication.

memory until it is erased by the Diagnosis System SD-1.

If the light comes on due to malfunction while the vehicle is being used, it is advisable to stop the car, remove the power supply to the ECU by turning the ignition key to STOP and then turn the key back to ON to switch it on again.

If the malfunction has ceased (e.g. false contact) the light will not come on again and the system will start to operate normally. If the fault is still present the system will remain in failure mode.

By using the Diagnosis System SD-1 in the trouble-shooting of this system, the aided diagnosis and the active diagnosis referred to the four motors, an automatic cycle and the Buffer function can be carried out, besides detecting possible errors.

Parameter display

The data that can be displayed are:

a - present and rated actuator values;

b - setting curve;
c - car speed;
d - horizontal acceleration sensor indication
e - braking in progress;
f - accelerometer indication.

RIM PERIODICAL CHECKS

During the yearly maintenance services, or when a tyre must be replaced, **make** a check of the rim conditions (paint conditions both inside and outside and integrity check).

Yearly maintenance checks

1 - **Wheel check:** if some cracks are detected, replace the rim.

Check the conditions of the silicon rubber ring between hub and brake disk (Fig. **23**):

a) presence of cuts, abrasions, damages: replace the whole ring;

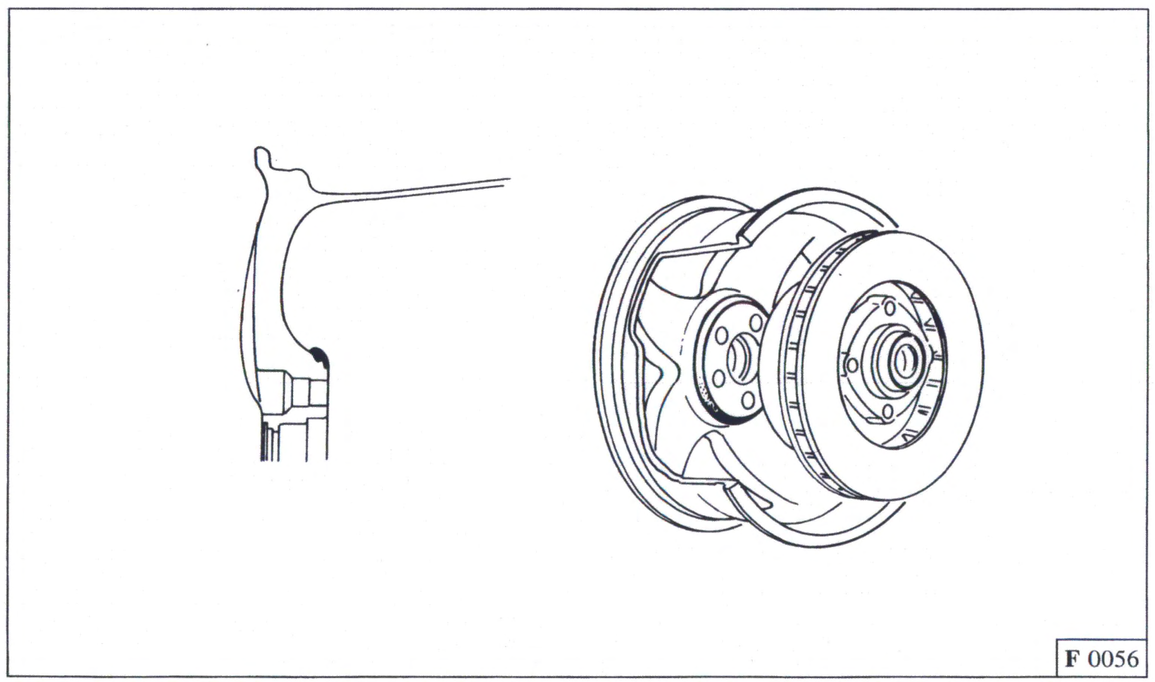

Fig. 23 - Silicon ring positioning on the rim.

b) movement from its standard seat: restore the correct housing;

c) disassemble the rim and check the conditions of the wheel hub or the brake disc. Remove possible infiltrations of material, clean and wipe carefully the pieces.

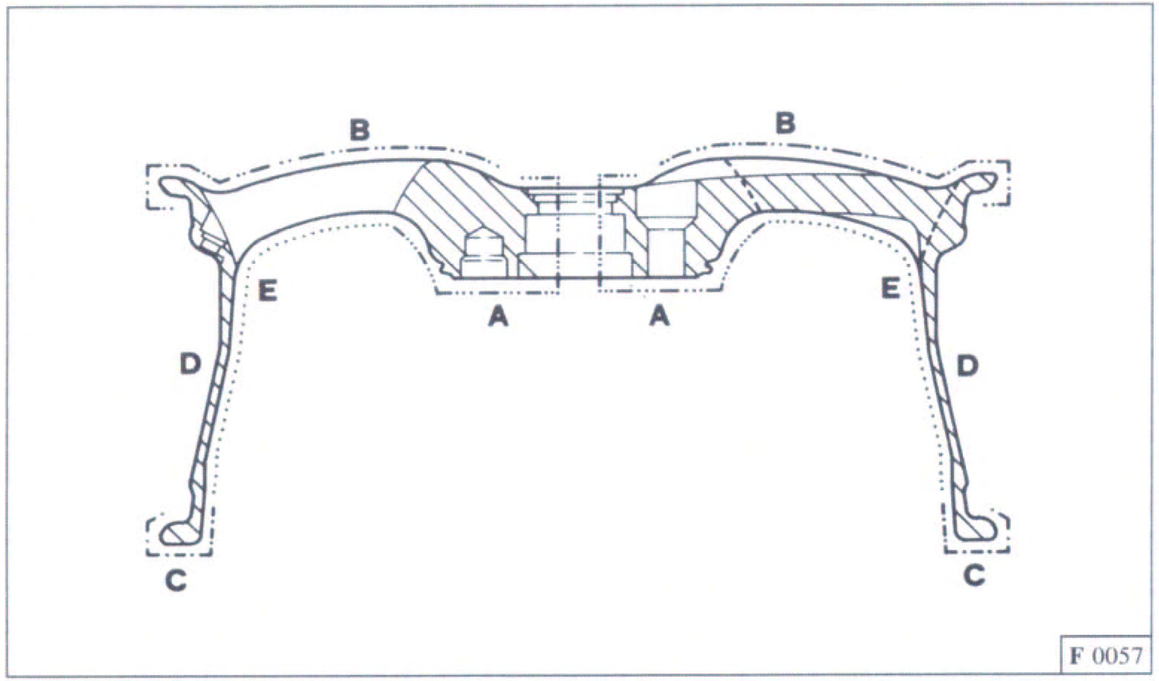

Fig. 24 - Rim profile with indications of the area to be checked.

2 - Check, in the area A, the presence of foreign matters (especially in winter) or corrosion traces: if the corrosion area diameter is over 1 mm and concentrated in less than or equal to 2 mm, replace the rim.

3 - Check the presence of corrosion traces in the area A: if their diameter is 1 mm and they aren't con-

centrated (that is at 5 mm from each other), act as follows:

a) clean the cataphoresis area (black) with a dry cloth;

b) repair the visible area (see item **6**).

4 - Check of possible damages:

— **in the areas B and C:** repair the rim only if the removed material isn't more than 0.3 mm, by means of sanding, without discovering the metal couch in the surrounding areas.

— **In the area E:** proceed as per the area B: if there are linear grooves on 360°, replace the rim; otherwise balance without the tyre as specified further on.

Checks in case of replacement of a tyre

In addition to the above checks, proceed as follows:

5 - Balancing without tyre: if the static grams are over 36, after removing the balancing weights, including those for bumps and side-skids, replace the rim.

6 - Check of possible damages in the area D: proceed as described on item 3 for section **A**.

Note: during assembly and disassembly, pay special attention not to damage the rim.
The use of unsuitable tools can cause a total abrasion of the paint, discovering the underlying material.

PROCEDURE FOR EVALUATING WHEEL RIM DAMAGES AND FOR A POSSIBLE FURTHER REPAIR

A - Visual check

It's the most delicate step, requiring the utmost care and scrupulousness.

Even though the Speedline original painting cycle for magnesium wheels is stronger (and thicker) than the one used for aluminium wheels, some abrasions could occur until discovering the underlying metal. The magnesium alloys are extremely dangerous in case of corrosion, because this metal shows a high reactiveness with water (moisture). The galvanic coupling effects with other metals are extremely dangerous as well, because generally they corrode the magnesium (more anodic).

Therefore, the rims showing even only some craccks visible to the naked eye shouldn't be repaired: they must replaced with new ones.

As for the damages involving localized strains, act as for the aluminium rims.

The damaged area (requiring the repair) must be first cleaned carefully with thinners, clean water, clothes, etc... to remove any dirt and contamination phenomenon on the surface: the damaged area must be inspected perfectly to decide the action to be undertaken.

This is especially vald for the rim inner (hidden) side. During checks in the workshop on the car, always verify the whole rim, checking the general surface conditions, as well as the presence of the black silicone ring - that should be integer. This ring should be replaced if signs of abrasion or carvings are found.

REPAINTING

General remarks

Surface cracks and marks are accepted if they don't pass the transparent film.

The repair can be postponed to a further service.

The decision for a localized painting intervention is free, depending on the customer's requests.

The operation corresponds to a standard painting work, with a partial slight sanding of the transparent film for a

better adhesion of the touch-up; a slightly wider painting than the true physical damage avoids the "tearing" of the glaze layer.

If the material removal (abrasion) reaches the silver couch (concerning only the transparent film), the repair work can be postponed (apart from different special evaluations coming from other causes); nevertheless, the damage type should be recorded and its progress should be evaluated during the next workkshop check. It should be checked if the transparent film absence hasn't spread rrther on.

The operation corresponds to a standard repainting of aluminium rims, restoring the silver couch and then - after the film matting - applying the transparent film and drying for the polymerization of the whole pack.

If the area to be repainted (damaged area) concerns the tyre edge supporting bead, it should be evaluated the possibility of a repainting with or without the assembled tyre.

As a matter of fact, it should be remembered that in these areas the couch material should always be coated with a suitable paint layer. In case of doubt, it's better disassembling the tyre.

Even when the touch-up concerns an area difficult to reach with assembled tyre, disassemble it for the required access (and cleaning possibility) all the damaged area long.

The polyester primer sanding used by Speed line in its OEM cycle - when made for starting a repair work - must be made with wet sand paper, due to the hardness of the polyester primer film. The rim drying for removing the possible residues must be very accurate; use a hot air hair drier.

The ETOPLAST 103 S primer layer must be touched-up with the ETOPLAST 30.08 primer within one hour, for the highest adhesion. If you know in advance that this condition cannot be complied with, postpone the rim repair, without leaving long stay times before completing the primers.

As for the wheel hub in the rear area, matching the brake disc, the only treatment is the cataphoretic layer. This painting doesn't last very long, due to the micro-movements of the relevant supporting planes (fretting). The cataphoretic film tends to disappear during use. This phenomenon is known and recognized as a standard event caused by the car utilization.

During the periodical rim disassembly works, make sure that - before the reassembly - the plane is perfectly clean and dry. Use a clean cloth and a hot air hair drier if required.

No repainting of this area is envisaged. During assembly, make sure of the correct seating of the silicon rubber ring of the hub-coating molding (outside and possibly inside).

There are some rim parts, such as:

— valve housing;

— hub molding seat;

that must be protected during repainting or anyway against possible stocks, to avoid problems during assembly or disassembly; this could also reduce the efficiency of the installed corrosion-preventing guards.

OEM PAINTING CYCLES (SPEEDLINE ORIGINAL CYCLE)

1 - Magnesium chromatizing.

2 - Cataphoresis (plus stoving in oven).

3 - Double-component epoxy layer (plus stoving in oven).

4 - Melamine polyester layer (plus stoving in oven).

5 - Silver couch (wet/wet with transparent film).

6 - Transparent layer (plus stoving in oven).

TOUCH-UP REPAINTING CYCLES WITH CATAPHORETIC LAYER

Removal of the painting cycle, primer included

1 - Cleaning of the area to be re-painted.

Clean accurately the part, to remove traces of grease and dirt.
Sand with 800/1000 grain wet sand paper, for a limited thickness (a few microns), only for a better adhesion of the next primer layer and without discovering underlying layers, then remove carefully the sanding dust residues. The sanded area must be larger than the true damaged one, for removing possible areas with difficult, but non-visible adhesion, due to possible moisture infiltration under the paint. Always bearing in mind that no underlying layer should be discovered, the couch and the primer can be removed (partially) while sanding the intervention areas; in this case the corrosion-preventing layer touch-up area increases proportionally.

2 - Application of the ETOPLAST 103 S primer (according to its technical file); thickness: up to 30 microns.
With this thickness, the primer ensure a perfect adhesion between the

cataphoretic layer and the one repainted with new products.
Stoving of the product with IR lamps or in a booth at 60°C FOR NOT OVER 20 minutes (part temperature).
Cooling at room temperature (in a cleaned area) for about 15 ÷ 20 minutes.
The sanding procedures must be postponed after step **3**.
Within one hour, pass to step **3**.

3 - Apply the ETOPLAST 30.08 primer (according to its technical file); thickness: about 60 ÷70 microns in two layers. After the first layer, wait about 15 minutes for the flash period (matting), then apply the second layer.

Stoving: (part temperature)
100°C / 40 minutes,
as an alternative, 80°C / 1 hour
60°C / 2 hours.

Note: cool at room temperature before sanding.

The ETOPLAST 30.08 primer is given for its good adhesion properties to 103 S, as filler that can be well sanded for a good paint finish.

4 - Sand the surface with 1000 grain dry sand paper, by removing a small thickness (a few microns) of primer only for a better adhesion of the next couch and to remove spraying defects (coarse peel), by carefully removing the sanding dust residues.

5 - Apply the silver couch (according to its technical file) wet/wet with:

6 - Acrylic transparent film (prepared according to its technical file).
Thickness approximately 30 microns.
Stoving at 60°C for 60 minutes (according to technical file).

TOUCH-UP ON A SECTION WITHOUT THE CATAPHORETIC LAYER (REMOVAL OF THE PAINTING CYCLE, CATAPHORETIC LAYER INCLUDED, WITH DISCOVERY OF THE COUCH METAL)

1 - Clean the area to be repainted.
Make a careful part cleaning, to remove traces of grease and dirt.
Sand with 800/1000 grain dry sand paper, to remove completely the residues of oxidized alloy and for a better adhesion of the next primer layer, then remove all the sanding dust residues.

The sanded area must be larger than the true damaged one, for removing possible areas with difficult, but non-visible adhesion, due to possible moisture infiltration under the paint.

2 - Apply the ETOPLAST 103 S primer (according to its technical file); thickness: 50 ÷ 60 microns. Stove the product with IR lamps or in a booth at 60°C FOR NOT OVER 20 minutes (part temperature). Cool at room temperature (in a cleaned area) for about 15 ÷ 20 minutes.
The sanding procedures must be postponed after step 3.
Within one hour, pass to step 3.

3 - Apply the ETOPLAST 30.08 primer (according to its technical file); thickness: about 60 ÷ 70 microns in two passes. After the first layer, wait about 15 minutes for the flash period (matting), then apply the second layer.

Stoving: (part temperature)

100°C / 40 minutes

as an alternative: 80°C / 1 hours
60°C / 2 hours

Note: cool at room temperature before sanding.

4 - Sand the surface with 1000 grain dry sand paper, by removing a small thickness (a few microns) of primer only for a better adhesion of the

next couch removing the sanding dust residues.

5 - Sand the surface with 1000 grain dry sand paper, by removing a small thickness (a few microns) of primer only for a better adhesion of the next couch and to remove spraying defects (coarse peel), by carefully removing the sanding dust residues.

6 - Apply the silver couch (according to its technical file) wet/wet with:

7 - acrylic transparent film (prepared according to its technical file) or acrylic-polyurethane transparent film (prepared according to its technical file), thickness 30 microns, stoving 60°C for 60 minutes (or according to its technical file), polishing if required.

If the rim repainting concerns an area including two spokes (outer side) or **large areas** in the inner side of the groove, send the rim to Speedline for the original complete repainting at 140°C.

MATERIALS REQUIRED FOR THE REPAINTING CYCLE

- ETOPLAST 103 S
- HARDENER for ETOPLAST 103 S

- THINNER for ETOPLAST 103 S
- ETOPLAST 30.08
- HARDENER, same as 103 S
- THINNER, same as 103 S

(for both primers, only the catalysis ratio changes).

Comply with the instructions as for the catalysis ratio, application viscosity, application conditions, the compliance with the times, stoving temperatures.

SILVER and TRANSPARENT COUCH, according to the method used for aluminium rims (the Speedline products are by AKZO Coating).

	TIGHTENING TORQUE SUMMARY TABLE			Thread mm	Torque Nm
	• Front and rear wheel sensor fastening			**M6**	**6,4**
	• Steering box projection fastening (only mechanical power steering)			**M6**	**12**
	• Wheel centering pin for brake disc fastening			**M8**	**15**
	• Nut for front and rear shock absorber fastening to the chassis			**M8**	**20**
	• Ball joint fastening to upper arm			**M8**	**20**
	• Steering box fastening to the chassis			**M8**	**20**
	• Ball tie-rod fastening to the front suspension lower arm			**10 x 1,25**	**49**
	• Ball tie-rod fastening to the front and rear stabilizer bar			**10 x 1,25**	**49**
	• Ball tie-rod fastening to the plate on the hub-holder			**10 x 1,25**	**49**
	• Ball joint fastening to lower arm			**10 x 1,25**	**49**
	• Front and rear wheel bearing fastening screw			**10 x 1,25**	**70**
	• Axle-shaft fastening screw to the differential flange			**10 x 1,25**	**78**
	• Axle-shaft fastening screw to the differential flange			**10 x 1,25**	**95**
	• Nut for front shock absorber fastening to hyperblock			**12 x 1**	**39**

	TIGHTENING TORQUE SUMMARY TABLE			Thread mm	Torque Nm
	• Upper and lower ball joint fastening nut to stub axle			12 x 1,25	63
	• Caliper fastening screw			12 x 1,25	63
	• Front shock absorber and lower joint fastening to lower arm			12 x 1,25	69
	• Rear shock absorber fastening to hub-holder			12 x 1,25	69
	• Rear suspension upper arm fastening to hub-holder			12 x 1,25	69
	• Fork fastening to front suspension lower arm			12 x 1,25	78
	• Front and rear suspension upper arm fastening to forks on chassis			12 x 1,25	78
	• Ball joint fastening nut for steering levers on stub axle			12 x 1,5	63
	• Lower fork fastening nut to front suspension chassis			14 x 1,5	78
	• Rear fork fastening to chassis			14 x 1,5	78
	• Rear lower suspension arm fastening to hub-holder			14 x 1,5	98
	• Fork fastening to lower rear arm			14 x 1,5	98
	• Wheel fastening bolt to front bearing			14 x 1,5	98

F355

October '94

BRAKES

G

G

CONTENTS

- Specification and data **G3**
- Brakes **G5**
- Teves ABS MK II brake system **G11**
- Description and operation of main hydraulic components **G17**
- Auxiliary hydraulic components **G27**
- Delay valve and braking corrector **G31**
- Description of electrical unit operation **G33**
- Notes on some electrical components **G35**
- Pressure test **G39**
- Check system **G42**
- Electrical system check using interconnector and multiscale meter **G53**
- Control valve operation check **G55**
- Handbrake **G58**

SPECIFICATION AND DATA	Front	Rear
Brake system	ventilated disc in stabilized nickel-molybdenum cast iron	ventilated disc in stabilized nickel-molybdenum cast iron
Brake discs		
• diameter ..... mm	300	310
• Nominal thickness ..... mm	28	24
• Min. acceptable after grinding ..... mm	26	22
• Flatness tolerance with disc on hub (measured on dial gauge) ..... mm	0.075	0.075
• Parallelism tolerance on both surfaces ..... mm	0.015	0.015
• Max. disc circumferential surface roughness ..... μ	1.2	1.2
Brake calipers	BREMBO P4. 36/40 C	BREMBO P4. 36/40 C
• Cylinder diameter ..... mm	36/40	36/40
• Braking surface (one pad) ..... cm^2	41.8	41.8
Brake pads	TEXTAR T 400 FF	TEXTAR T 400 FF
• Min. thickness ..... mm	3	3
Clearance adjustment between and disc	automatic	automatic
• Braking regulator pressure ..... bar	20	20
Handbrake (operating only on rear wheels)		mechanically operated

BRAKE CALIPERS

Before removing the brakes:

— Clean the caliper-disc unit with a jet of steam to remove the dust that forms with pad wear.

— Dry with compressed air.
Do not use gasoline, diesel fuel or other solvents for cleaning procedures since this would damage the seals.

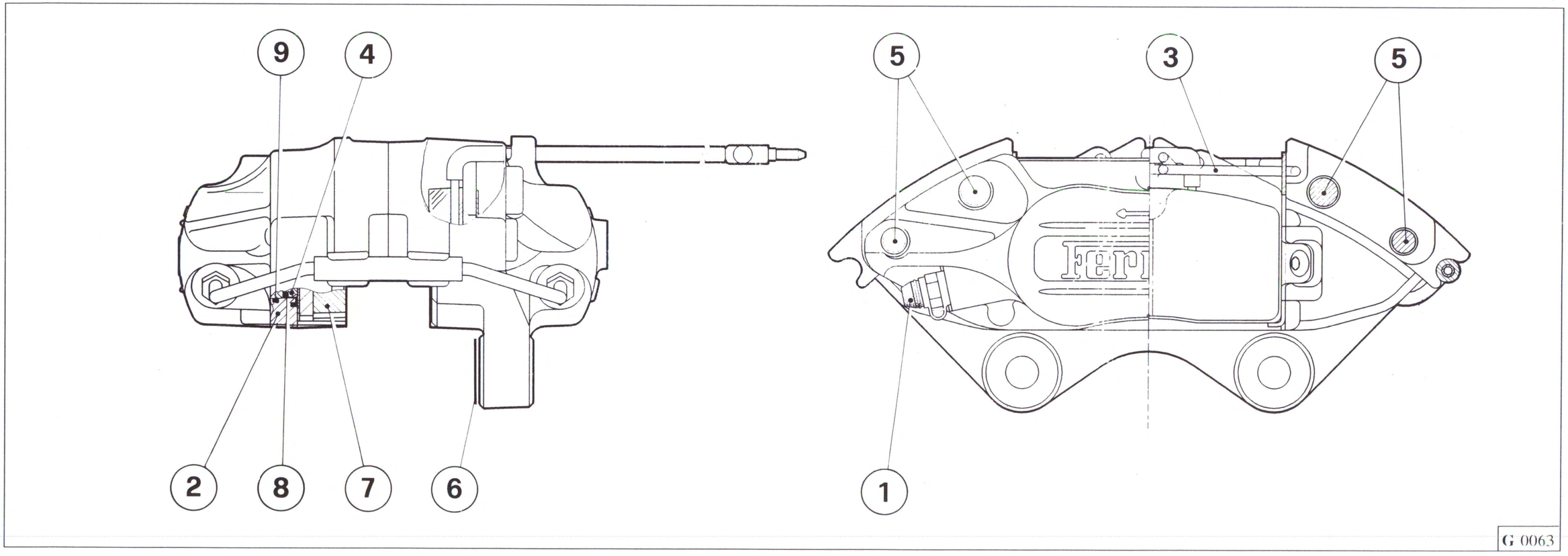

Fig. 1 - Front caliper

1 - Bleeding valve; **2** - Cylinder outer housing; **3** - Pad pressure spring; **4** - Cylinder; **5** - Blocking bolt; **6** - Caliper centering shim; **7** - Pad; **8** - Dust seal ring; **9** - Inner seal ring; **10** - Pin.

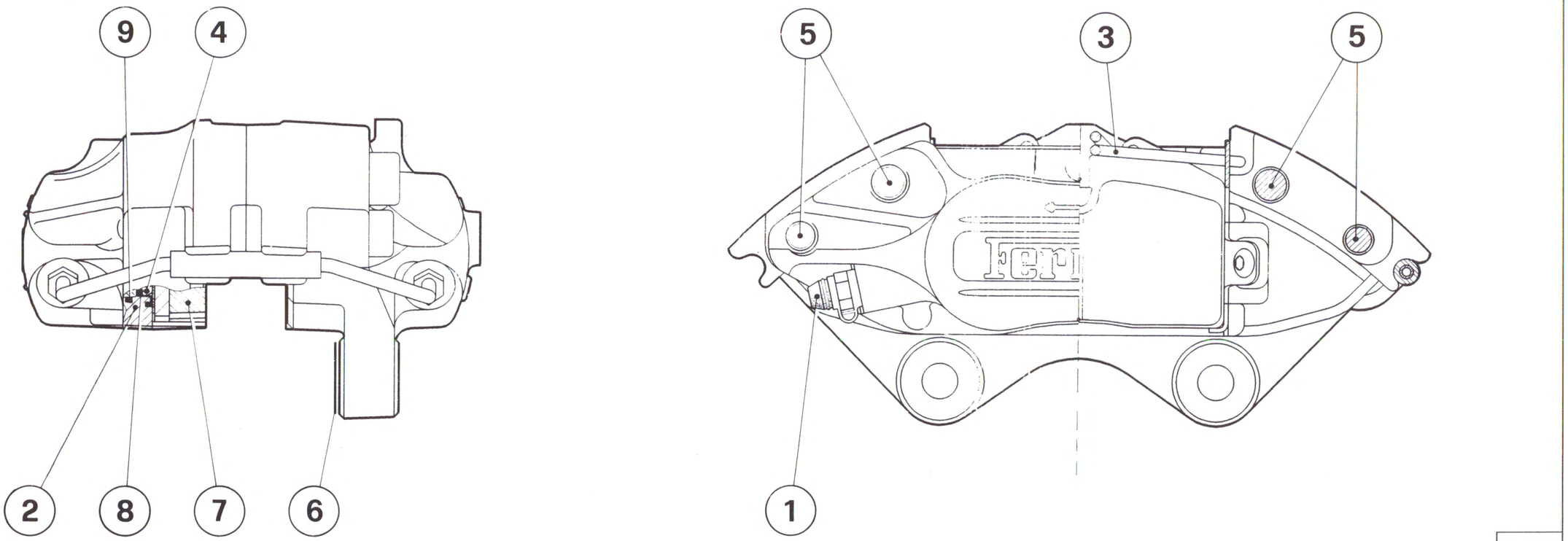

Fig. 2 - Rear caliper

1 - Bleeding valve;
2 - Cylinder outer housing;
3 - Pad pressure spring;
4 - Cylinder;
5 - Blocking bolt;
6 - Caliper centering shim;
7 - Pad;
8 - Dust seal ring;
9 - Inner seal ring.

Changing the brake pads

The front brake pads have built-in wear sensors. These switch the brake wear warning light (handbrake warning light) on when the pads wear down. Have the braking system inspected if this light comes on or if braking feels uneven or spongy.

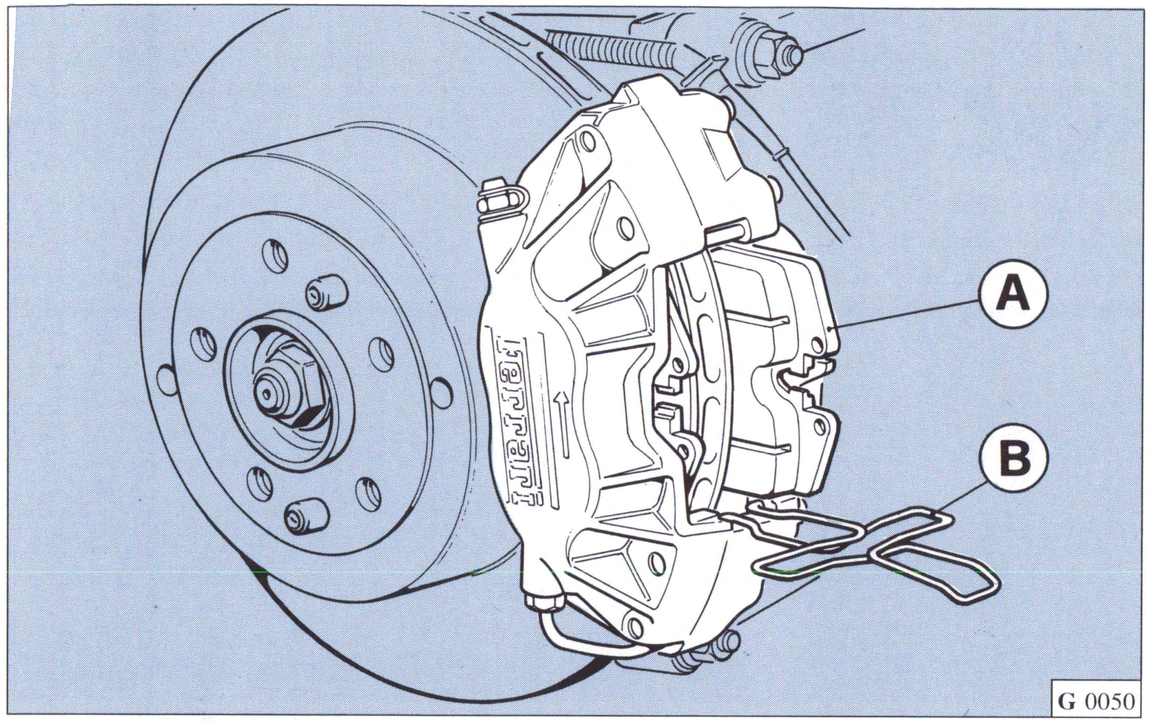

Fig. 3 - Changing the brake pads

A - Brake pad;
B - Pad retaining spring.

Never allow the friction lining of the brake pads to wear down to less than 0.12" (3 mm).

Only use **TEXTAR T400 FF** brake pads for the front and rear brakes.

To change the pads, remove the retaining springs **B** with a suitable pliers. Pull out the old brake pads and push the brake pistons back inside their cylinders. Fit the new brake pads and the replace retaining springs **B**.
Avoid sharp braking until the new pads bed in after 50 ÷ 60 miles (80 ÷ 100 km).

Note: the brake discs can be ground down to restore the surface, but must never be ground below the minimum thickness punched on the discs.

Note:
never use petrol, diesel, trichloroethylene or other solvents to clean the brake calipers or pads, since these can damage the hydraulic cylinder seals.

FILLING AND BLEEDING

Total capacity:

.33 Imp. Gallon FIAT Tutela Extreme 5 brake fluid.

Filling: through reservoir cap.

Bleeding: from brake callipers as in a conventional braking system. This must be carried out with accumulator charged and pump supply on.

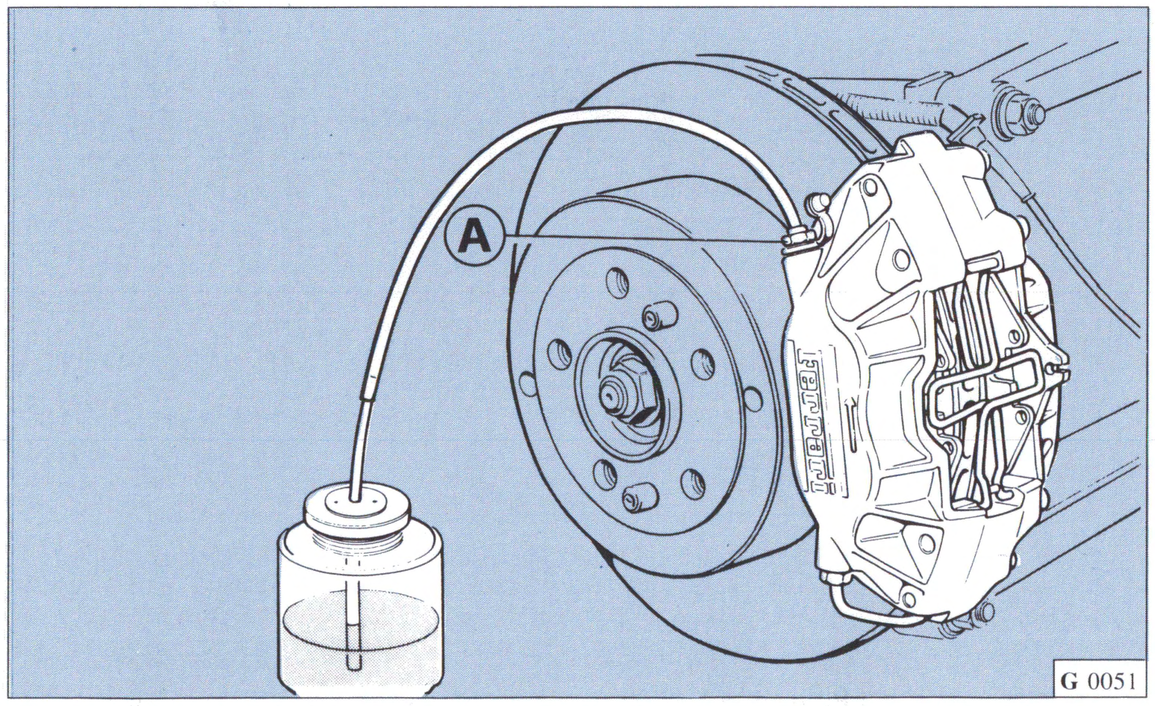

Fig. 4 - Bleeding the brake calipers
A - Bleeder.

Level: brake fluid level in reservoir after bleeding, checked with accumulator charged, must be between the **MIN** and **MAX** signs (Fig. **5**).

Note: do not re-use the old brake fluid removed during bleeding operations.

Note: brake fluid is extremely corrosive. Avoid contact with pantwork since damage could ensue.

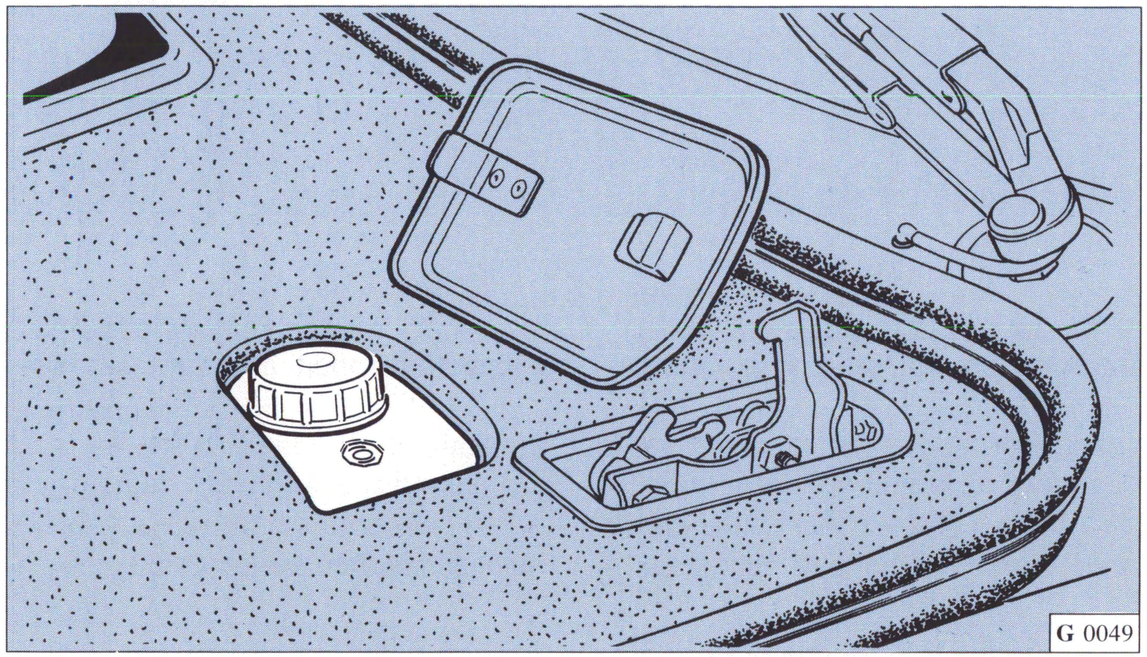

Fig. 5 - Brake and clutch fluid reservoir.

Both for front and rear calipers, during the pad disassembly, make the following checks:

— Check the surfaces and thickness of the disc; if necessary grind according to the tolerance limits and roughness values given in the table at page **G3**.

— If the pads are unevenly worn, check that the pistons slide and, using a thickness gauge (Fig. **6**) make sure the caliper is centered with respect to the disc.

— If necessary center it by alterring the number or thickness of washers **6** (Figs. **1** - **2**).

— Maximum permissible tolerance in caliper centering is 0.3 mm.

— Install the pad locking spring once again.

— Bring the pads nearer to the discs by pressing the brake pedal several times.

— Check that the clearance between pads and disc is approximately 0.1 mm.

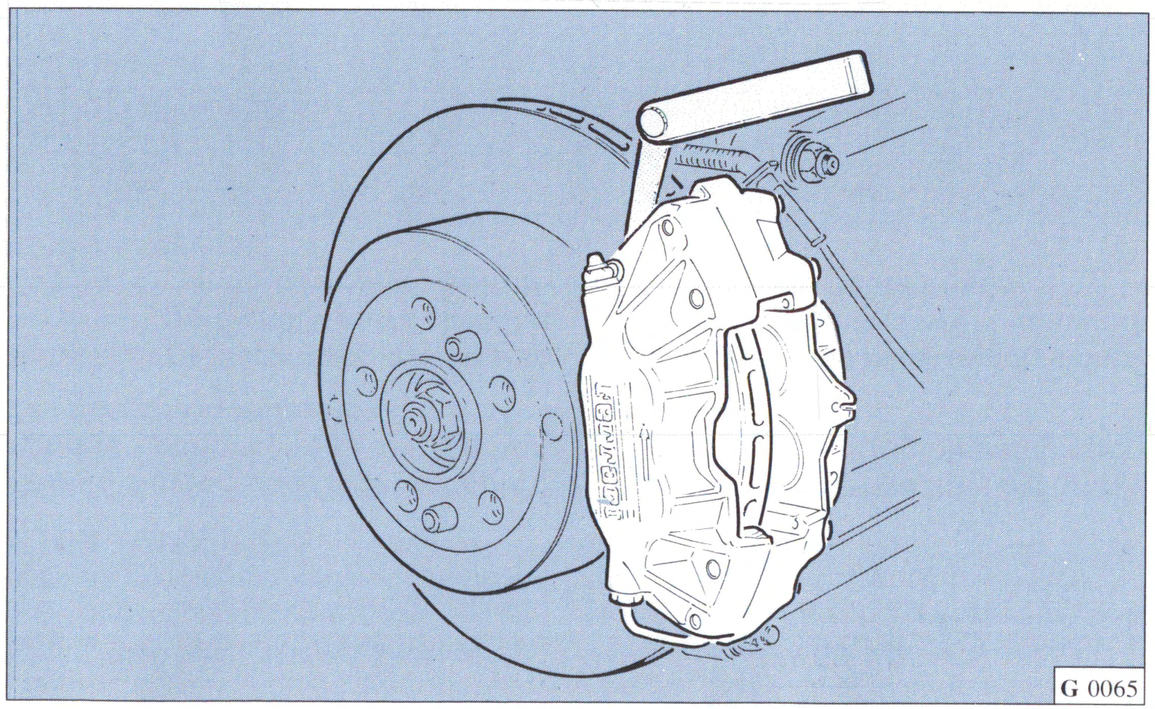

Fig. 6 - Caliper centering measurement.

TEVES ABS MK II
BRAKE SYSTEM

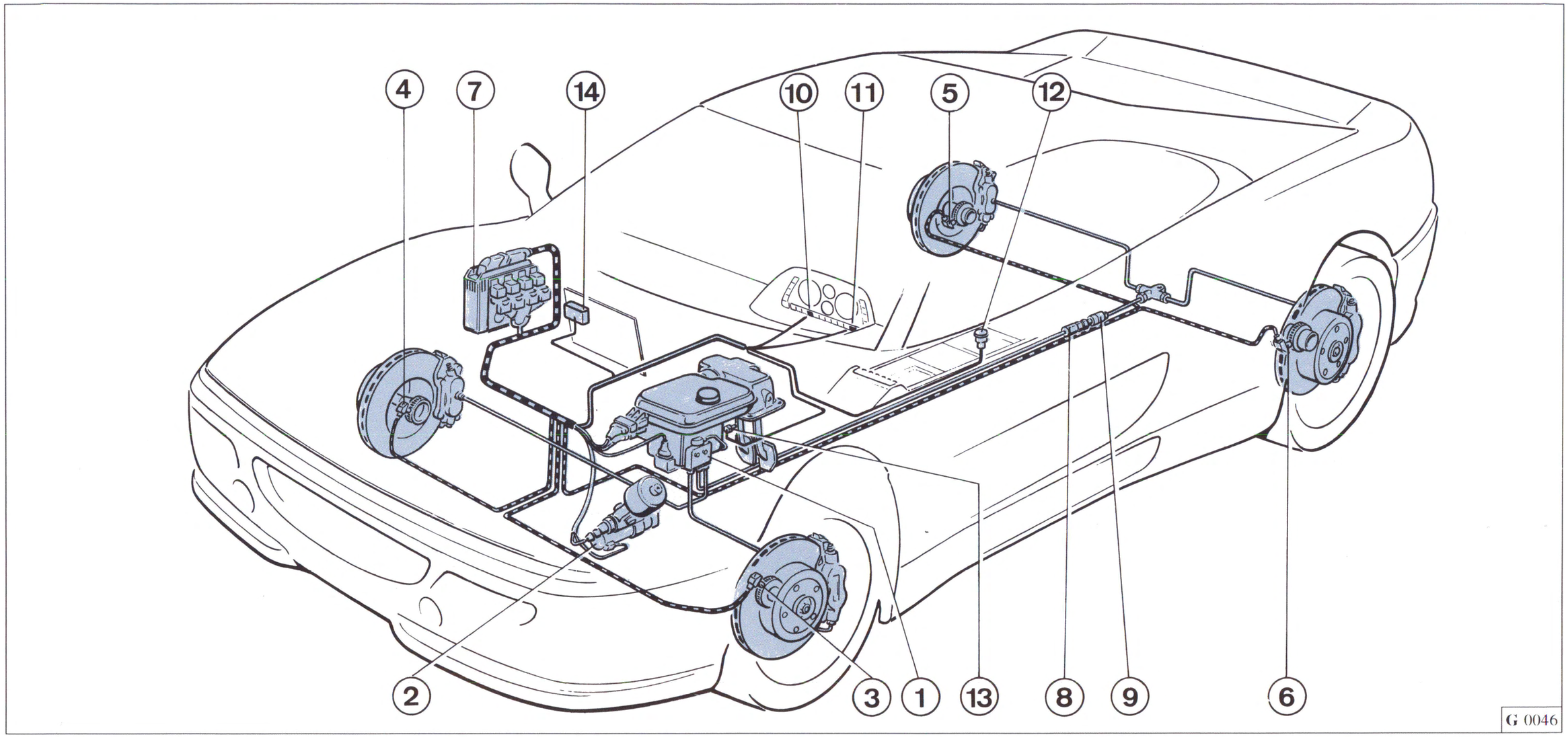

Fig. 7 - Braking system

1 - Main hydraulic unit; **2** - Auxiliary hydraulic unit; **3** - L. front wheel sensor; **4** - R. front wheel sensor; **5** - R. rear wheel sensor; **6** - L. rear wheel sensor; **7** - Electronic control unit; **8** - Delay valve; **9** - Braking corrector; **10** - ABS warning light; **11** - Brake failure warning light; **12** - Switch for ABS system cut - off; **13** - Switch for stop lights; **14** - Electronics for ABS cut-off

A braking system will be installed on the F 355 car. This will feature hydraulic brake servo and TEVES ABS MK II electronic antiskid device, as shown in the general layout in Fig. **7**.

The system includes a hydraulic brake assembly installed in place of a conventional vacuum servo. This consists of two units as follows:

A - Main hydraulic unit

B - Auxiliary hydraulic unit

A - Main hydraulic unit (1, Fig. 7)

with: brake fluid reservoir, hydraulic brake servo, separate brake pumps for front and rear axles, control valves.

The control valves, governed by an electronic control unit (**7**, Fig. **7**), automatically modulate braking pressure to prevent wheel lock and maintain maximum wheel grip even when the driver presses the brake pedal too heavily.

This effect, known as anti-skid or ABS, is achieved via cyclic reduction and resetting of braking pressure.
These cycles are repeated very rapidly (up to 15 times a second) and triggered as soon as one or more wheels near the locking threshold.

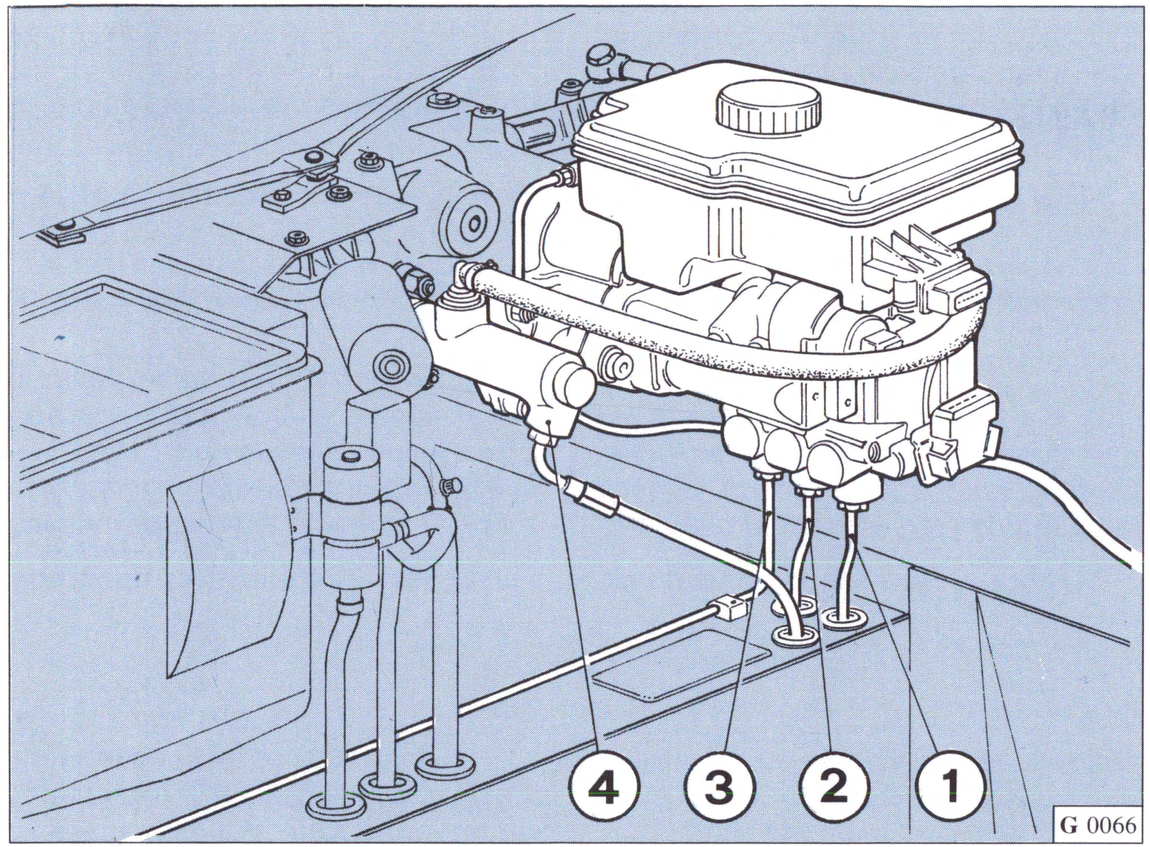

Fig. 8 - Hydraulic in engine compartment

1 - Line to left front calliper;

2 - Line to rear callipers;

3 - Line to right front calliper;

4 - Clutch pump.

Front wheels are individually controlled whereas rear wheels are controlled as a pair, i.e. the pressure in both rear brake callipers is modulatedas soon as one of the two wheels starts to lock.

B - Auxiliary hydraulic unit (2, Fig. 7), or electric pump/accumulator unit

Consists of an electrically driven pump, hydraulic accumulator and pressure switches. This supplies brake oil under pressure (140 ÷ 180 bars) required by the unit for both hydraulic brake servo and anti-skid operation.

The hydraulic units are supplied by a common brake fluid reservoir (FIAT Tutela Extreme 5 type). This bears **MIN** and **MAX** level marks on the side . The reservoir also incorporates microswitches for **MINIMUM** level indication (see **Sez. L**) as follows:

— two microswitches connected in parallel. These are normally open but close when level drops to **MINIMUM** to operate Brake Failure Warning Light. The circuit includes a resistance (R = 10 Ohms) that must be taken into account during checks.

— two microswitches connected in line. These are normally closed and connected to the ABS control unit; they open if the level falls still further, to cut out anti-skid operation and light up the associated warning light.

Electronic central unit (7 Fig. 7)

The microprocessor ECU controls the system working and detects working errors according to the storegram (see page **G 42**).

Electronics for ABS cutting out

It is further possible to cut the ABS function off by operating the cut-off push button (**A**, Fig. **9**).

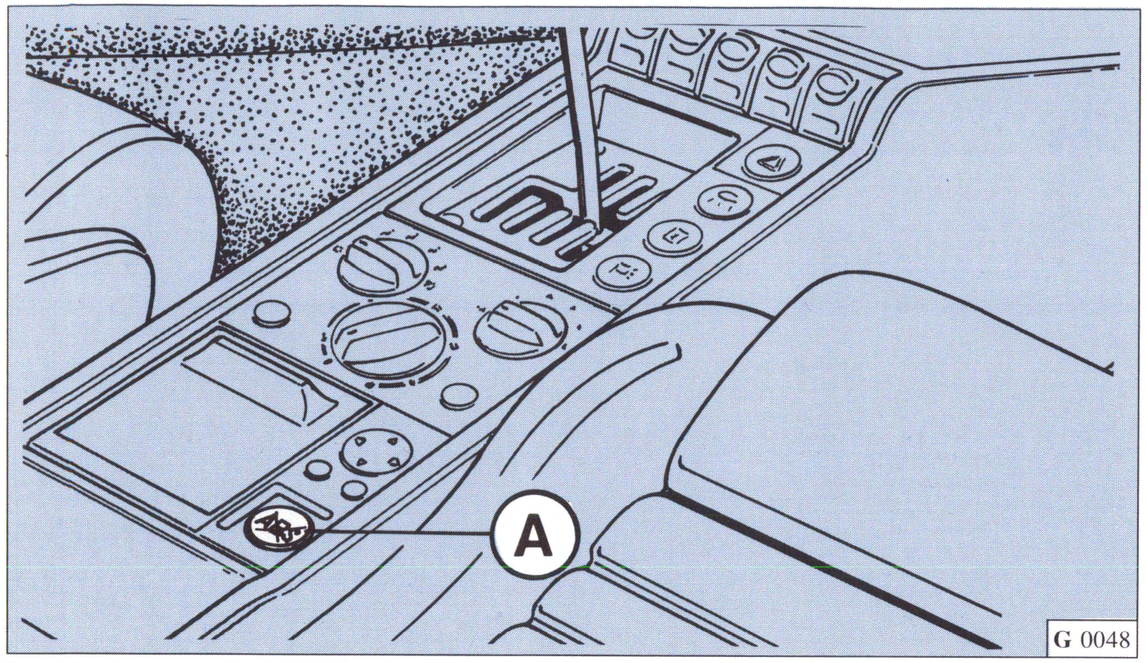

Fig. 9 - Control button for ABS system cut-off.

Other system components are:

— 4 electromagnetic sensors (**3** - **4** - **5** - **6**, Fig. **7**) that measure the speed of each wheel individually.

— An ECU support with relevant relays, diodes and electrical wiring for the brake fluid pump and the electronic central supply.

— A delay valve (**8**, Fig. **7**) and conventional braking corrector (**9**, Fig. **7**) (static pressure regulator) for the rear braking circuit.

— Brake discs and calipers.

— ABS warning light (**10**, Fig. **7**) on instrument panel to indicate anti-skid system failure.

— Brake failure warning light (**11**, Fig. **7**) on instrument panel to indicate low brake fluid level or danger of brake servo inefficiency.

Notes:

a - The system operates in the same way as a conventional braking system with hydraulic instead of vacuum brake servo during normal braking or when the ABS system fails.

b - Although the anti-skid system considerably improves braking stability, **it cannot counter the effects of excessive speed** for traffic or road conditions, **worn tyres, worn brake components or driving errors.**

DESCRIPTION AND OPERATION OF MAIN HYDRAULIC COMPONENTS

Hydraulic units

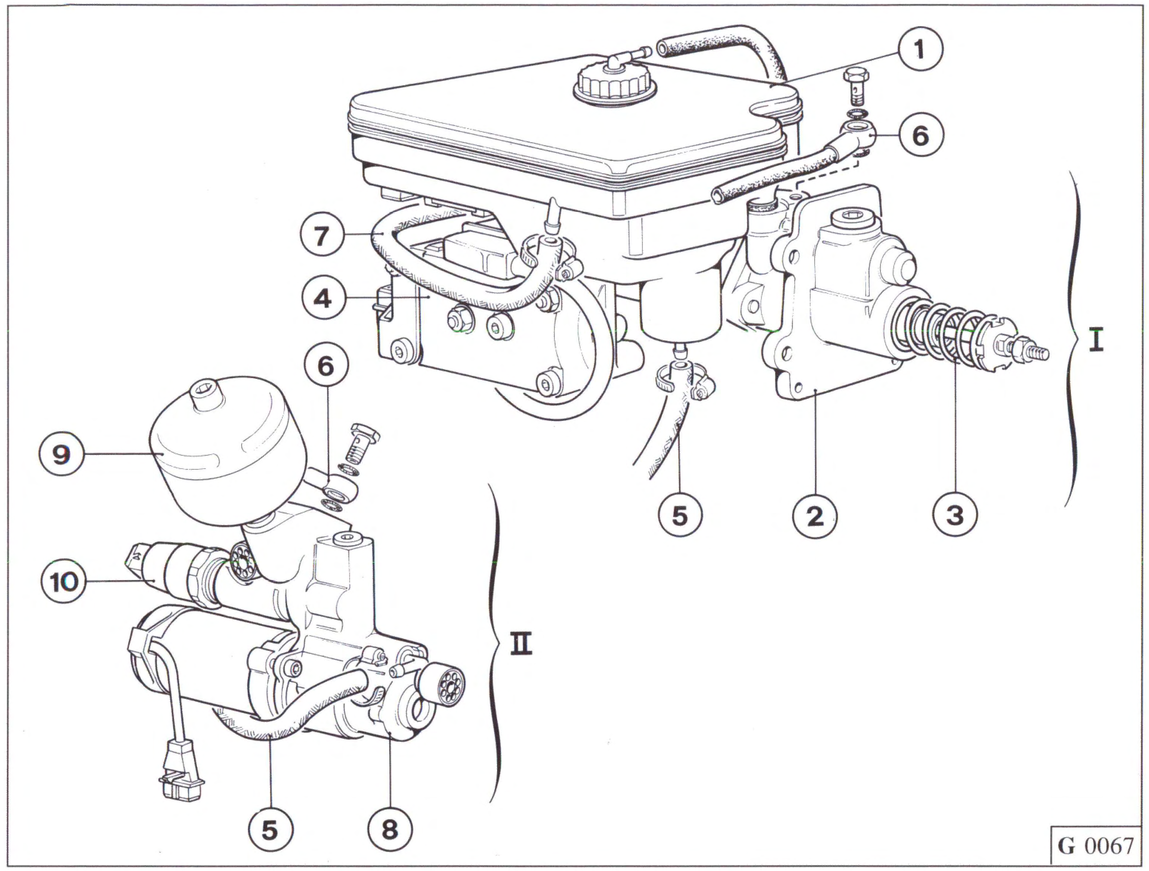

Fig. 10

I - Main hydraulic unit;
II - Auxiliary hydraulic unit (or electric pump/ accumulator unit);
1 - Brake fluid reservoir with MIN level switch; **2** - Brake pump with hydraulic brake servo; **3** - Brake pump actuator; **4** - Body with anti-skid control valves; **5** - Electric pump inlet line; **6** - Pressurised brake fluid outlet; **7** - Clutch pump supply line; **8** - High pressure pump with electric motor; **9** - Hydraulic accumulator; **10** - Three-way switch.

A - Hydraulic brake servo and brake pump (Fig. 11)

These are supplied at 140 ÷ 180 bars both directly from the brake fluid reservoir (**1, 2**) and from the auxiliary high-pressure circuit (**3**).

The hydraulic unit has been modified as for the solenoid valve opening calibration, in order to improve braking readiness in case of sudden braking.

Brief description of components:

Main control valve (4)

This is normally not activated and permits passage, under gravity, of brake fluid to the front brake pump. Activated during anti-skid system operation.

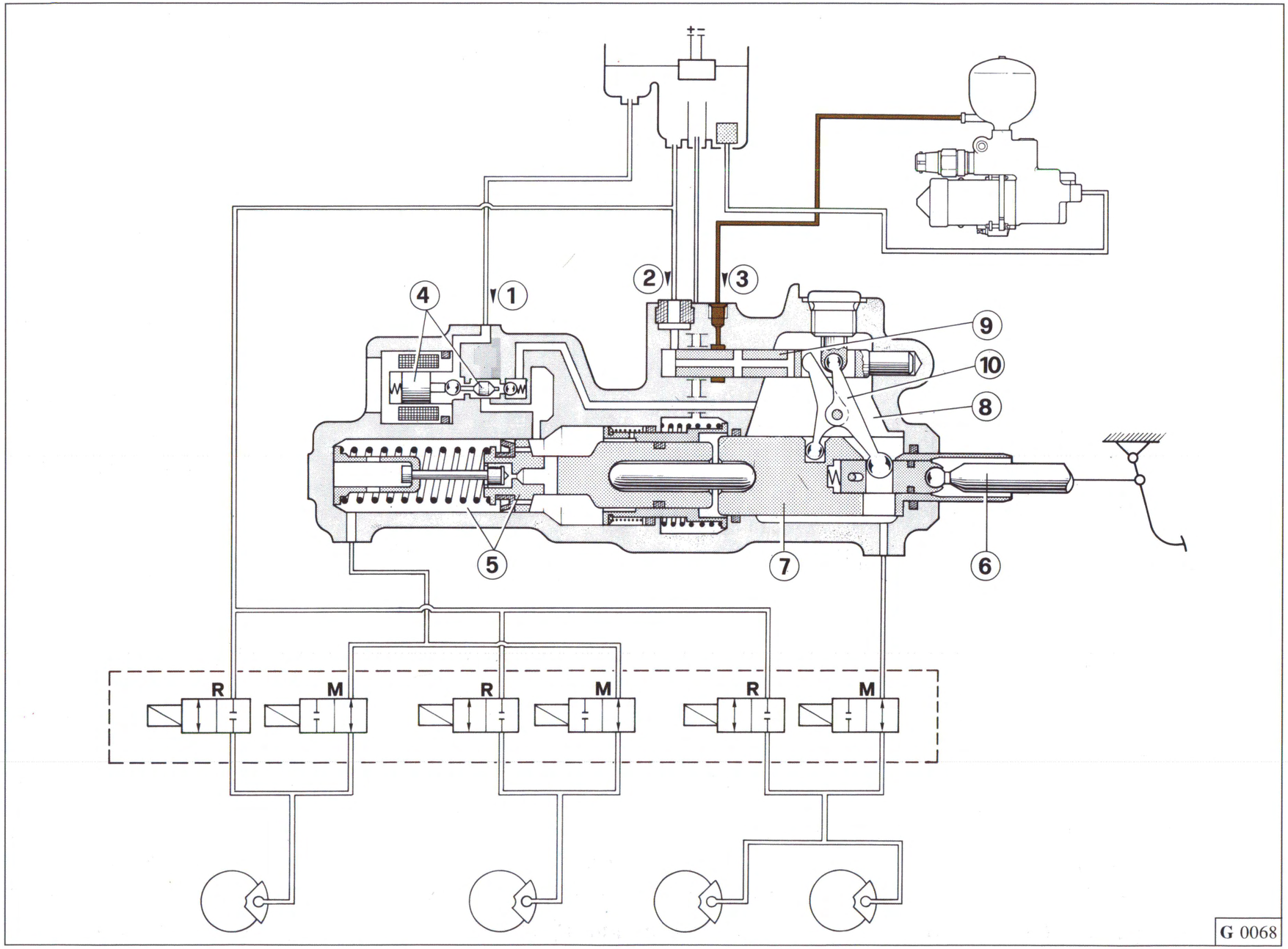

Fig. 11

Front brake pump (5)

Bore 23.81 mm, includes a piston with seals and return spring.

The piston is pushed by the actuator (**6**) connected to the brake pedal, with the aid of the hydraulic brake servo.

At rest, the central piston opening remains open to permit pump to be fed by gravity from reservoir.

The opening is closed as soon as the pump is operated.

Hydraulic brake servo

It consist in a piston (**7**), coaxial with actuator (**6**) which pushes the front brake pump forward assisted by the dynamic pressure set up in chamber (**8**). The dynamic pressure is regulated by slide valve (**9**) through lever (**10**).

At rest, slide valve (**9**) is in the rear position and permits gravity feed (**2**) of both chamber (**8**) and rear brake circuit.

A1 - During normal braking (without ABS)

When the brake pedal is operated, the following takes place (Fig. **12**): lever (**10**) travels a short distance before pushing forward slide valve (**9**) to shut off supply (**2**) from reservoir.

The higt-pressure circuit then opens (**3**) to admit dynamic pressure to chamber (**8**).

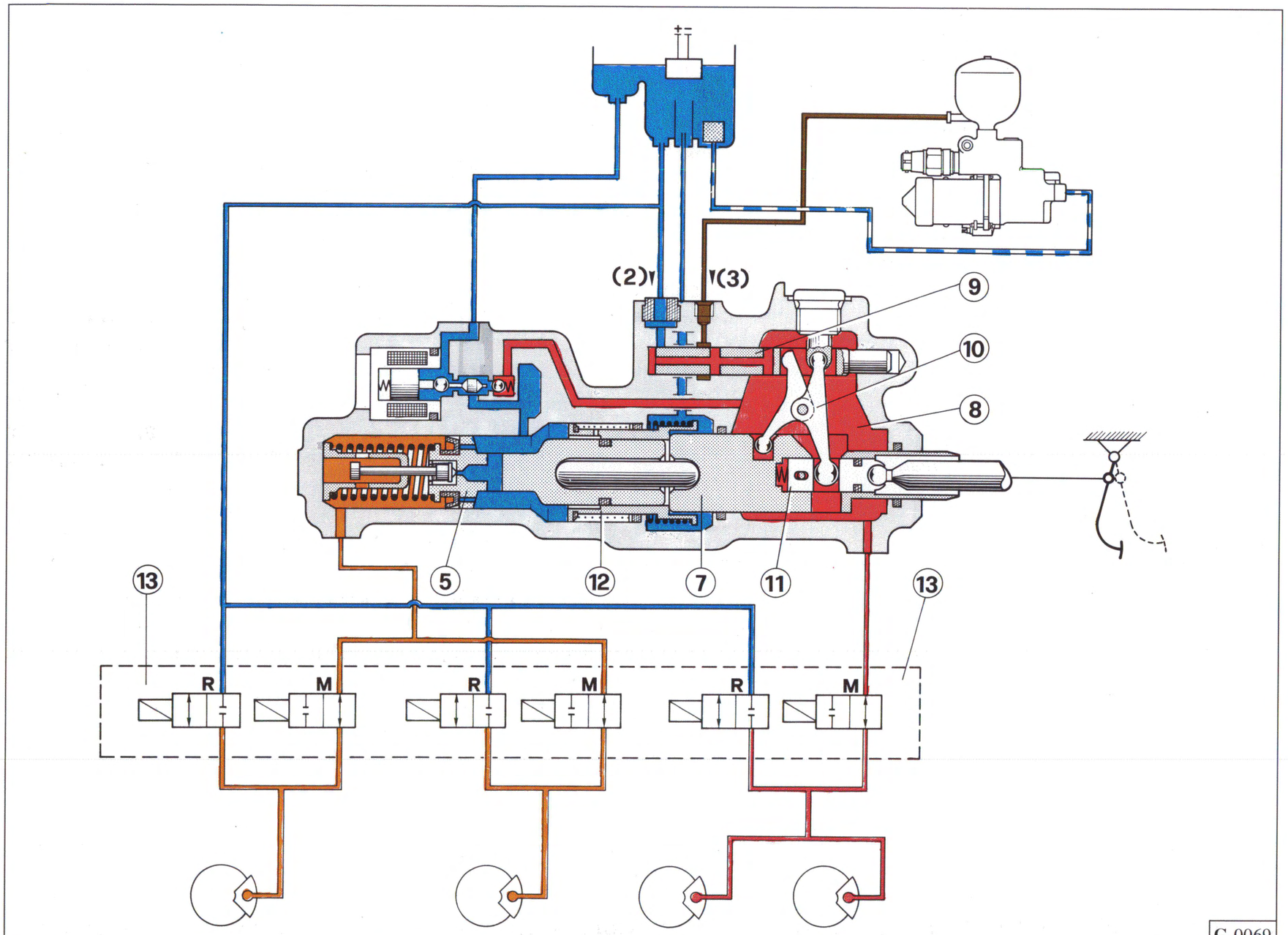

Fig. 12

The dynamic pressure (or brake servo pressure) operates brake servo piston (**7**) which in turn pushes piston (**5**) of front brake pump.

The dynamic pressure acts on front end (**11**) of the actuator to create at the brake pedal a reaction directly proportional to the braking effort. **The dynamic pressure also directly feeds the rear braking circuit, which communicates with chamber (8).**

Further movement of the brake pedal increases the dynamic pressure in chamber (**8**) which supplies the rear brake circuit and generates pressure (static) in the front brake pump.

Brake servo piston (**7**) enters into contact with intermediate bushing (**12**) which is consequently driven forward during pedal travel.

Brake callipers are supplied through an assembly of six control valves (**13**) incorporated in the hydraulic unit.
More specifically:

— delivery control valve **M** (normally open) and return valve **R** (normally closed) **for each of the two front brake calipers.**

— Delivery valve **M** (normally open) and return valve (**R**) (normally closed) **for the rear brake circuit.**

Fig. 13

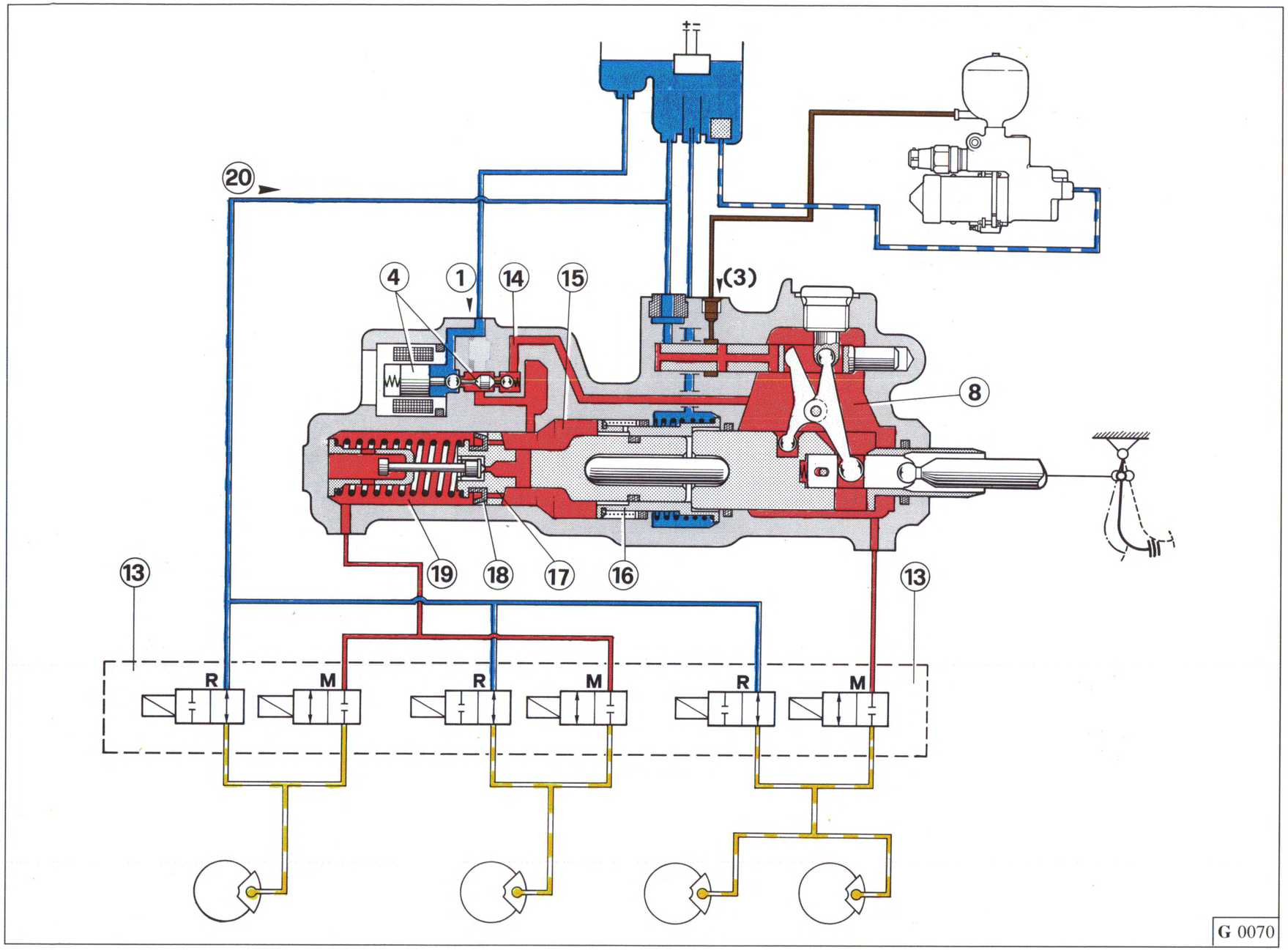

Note: the brake line to the back axle also includes a delay valve and braking corrector (**8** and **9**, Fig. **7**) not shown in Fig. **11**.

A2 - Braking with the ABS system (Fig. 13)

If the brake pedal is pressed too hard, electronic control unit (**7**, Fig. **7**) recognises, from signals sent by electromagnetic sensors (**3**, **4**, **5**, **6**, Fig. **7**), that one or more wheels are decelerating too rapidly.

Before reaching the point of wheel lock (or, to be more exact, at the point of maximum permitted deceleration), the control unit cuts in to ensure the maximum deceleration threshold is not exceeded as follows:

a - **TO CLOSE** and therefore activate the delivery valve (**13M**) associated with the wheel at the point of locking.

b - **TO OPEN** and therefore activate the corresponding return valve (**13R**).In this way the pressure at the relevant brake callipers is reduced.

c - **TO ACTIVATE** main control valve (**4**) in order to close communication between reservoir (**1**) and, simultaneously, opedynamic circuit (**14**) to permit delivery of dynamic pressure already present in chamber (**8**) to chamber (**15**).

The dynamic pressure in chamber **15** operates as follows:

c1:to return intermediate bushing (**16**) to the end of its travel and consequently to return brake servo piston and brake pedal in order to

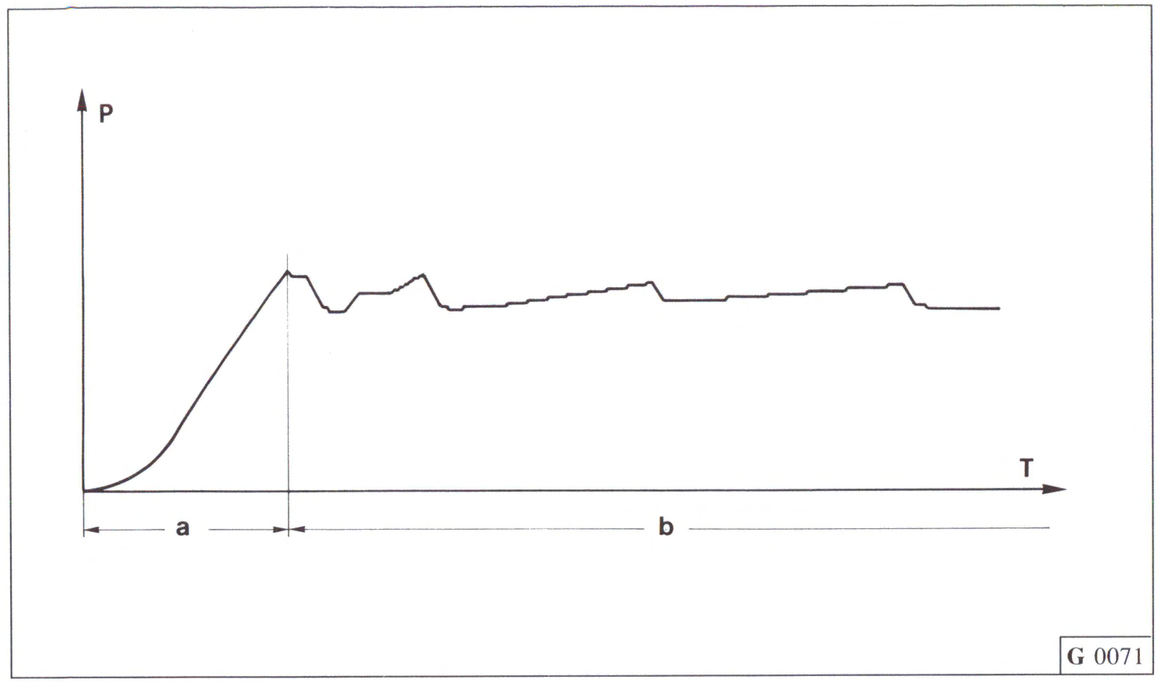

Fig. 14

increase remaining travel available for subsequent completion of braking.

c2: the dynamic pressure bypasses pump seals (**18**) through holes (**17**) in front pump piston and enters front pump (**19**) as far as delivery valve (**M**), which is closed.

In this way front and rear brake pumps are prepared for a subseguent rapid pressure increase when, under the control of the control unit, delivery valve (**M**) is opened (deactivated) and return valve **R** is closed (deactivated).

The control unit performs its anti-skid function by maintaining the main control valve activated and by activating then deactivating appropriate delivery (**M**) or return (**R**) valves.

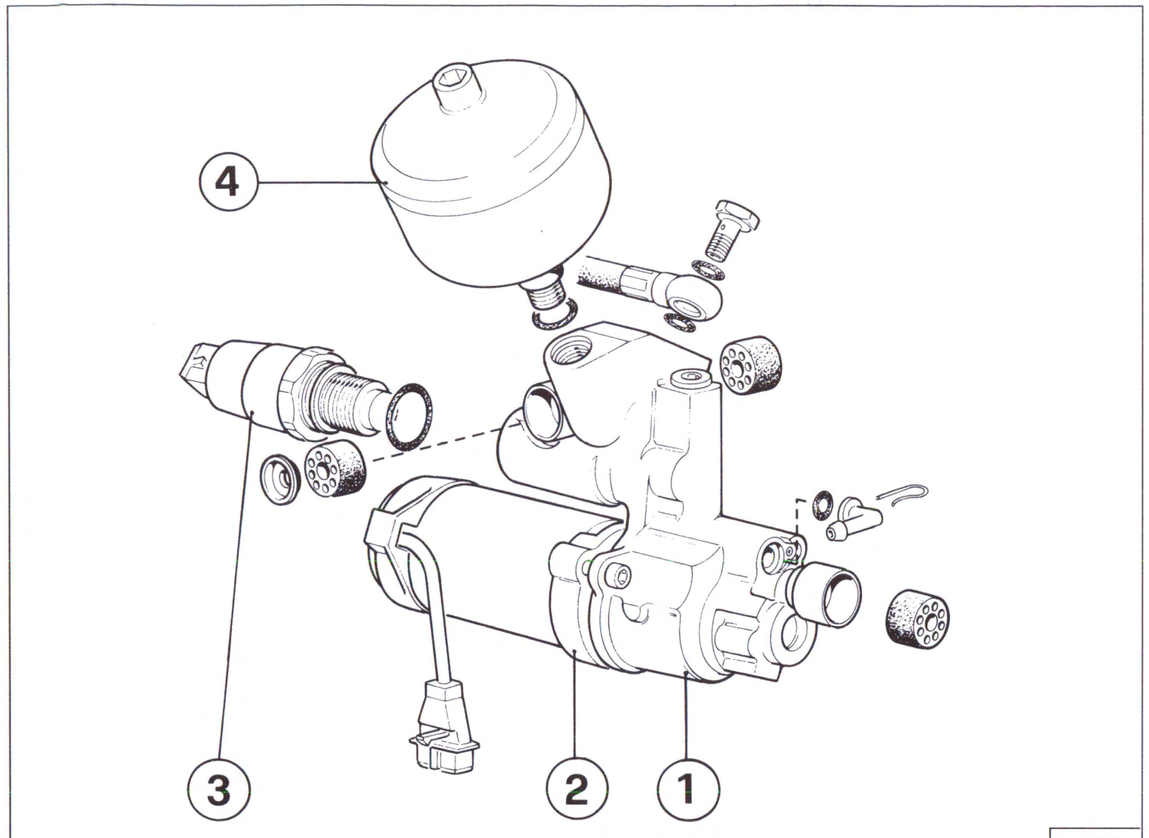

Fig. 15 - Auxiliary hydraulic unit

1 - High pressure pump;
2 - High pressure pump;
3 - Pressure switch;
4 - Accumulator.

During operation, part of the brake fluid passes from high pressure circuit (**3**) to both brake servo chamber (**8**) and front brake pump (**19**). It is then directed back to reservoir (**20**) through control valves.

Note:

in actual fact the delivery and return valves are not operated simultaneously as might be supposed from the above description which has been simplified for ease of comprehension. In fact the control unit drives each valve individually to create a complex cycle consisting of:

— **Reduction in pressure**
(**M** closed, **R** open)

— **Maintained pressure**
(**M** closed, **R** closed)

— **Increased pressure**
(**M** open, **R** closed)

An **approximate** guide to operation is shown in Fig. **14**.

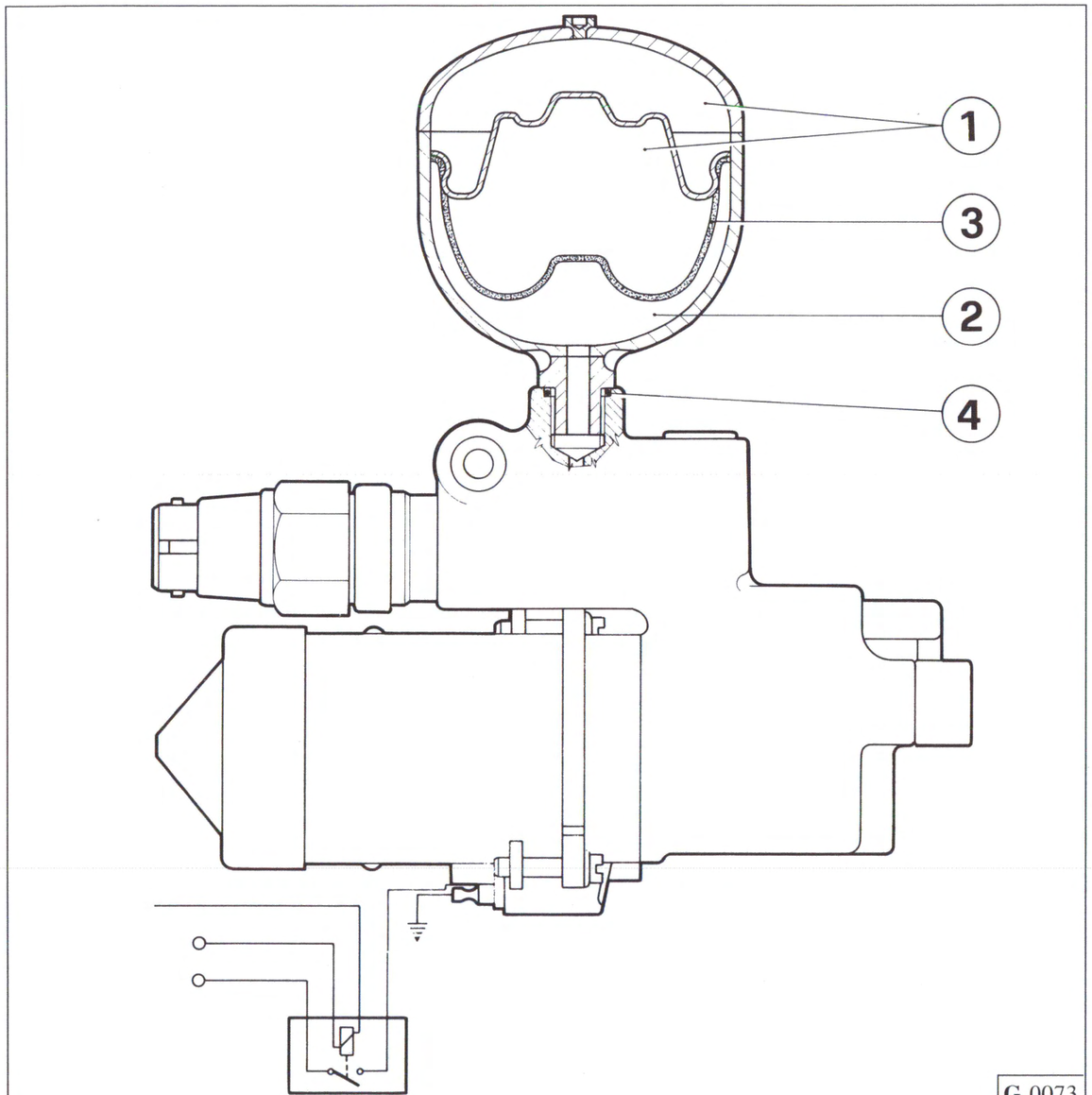

Fig. 16 - Hydraulic accumulator

1 - Upper chamber;
2 - Lower chamber;
3 - Membrane;
4 - Sealing ring.

B - High pressure pump (1 and 2 Fig. 15)

Two piston type operated by a cam driven by electric motor (**2**).

Intake is from the brake fluid reservoir through a filter (10 microns).

The pump is controlled by a pressure switch (**3**, Fig. **15**) through a relay (see **Sez. L**). It operates occasionally for brief periods when the ignition key is **ON** to keep accumulator (**4**, Fig. **15**) charged at a pressure of between 140 ÷ 180 bars.

Pump (**1**, Fig. **15**) incorporates a safety valve that is triggered at 210 bars.

Note: if excessive pressure causes this safety valve to open, the entire pump must be replaced.

C - Hydraulic accumulator (Fig. 16)

This is screwed to the pump unit with an O-ring. Inside it is divided into two chambers (**1** and **2**) by means of a thick membrane resistant to brake fluid.

Upper chamber (**1**) is initially filled with nitrogen at a pressure of 80 bars, then sealed.

The lower chamber is connected to the pump delivery line and expands to store pressurised brake fluid that is partially used during subsequent braking manoeuvres to:

— supply energy to hydraulic brake servo.
— Operate rear brake callipers.

— Supply anti-skid device (if necessary).

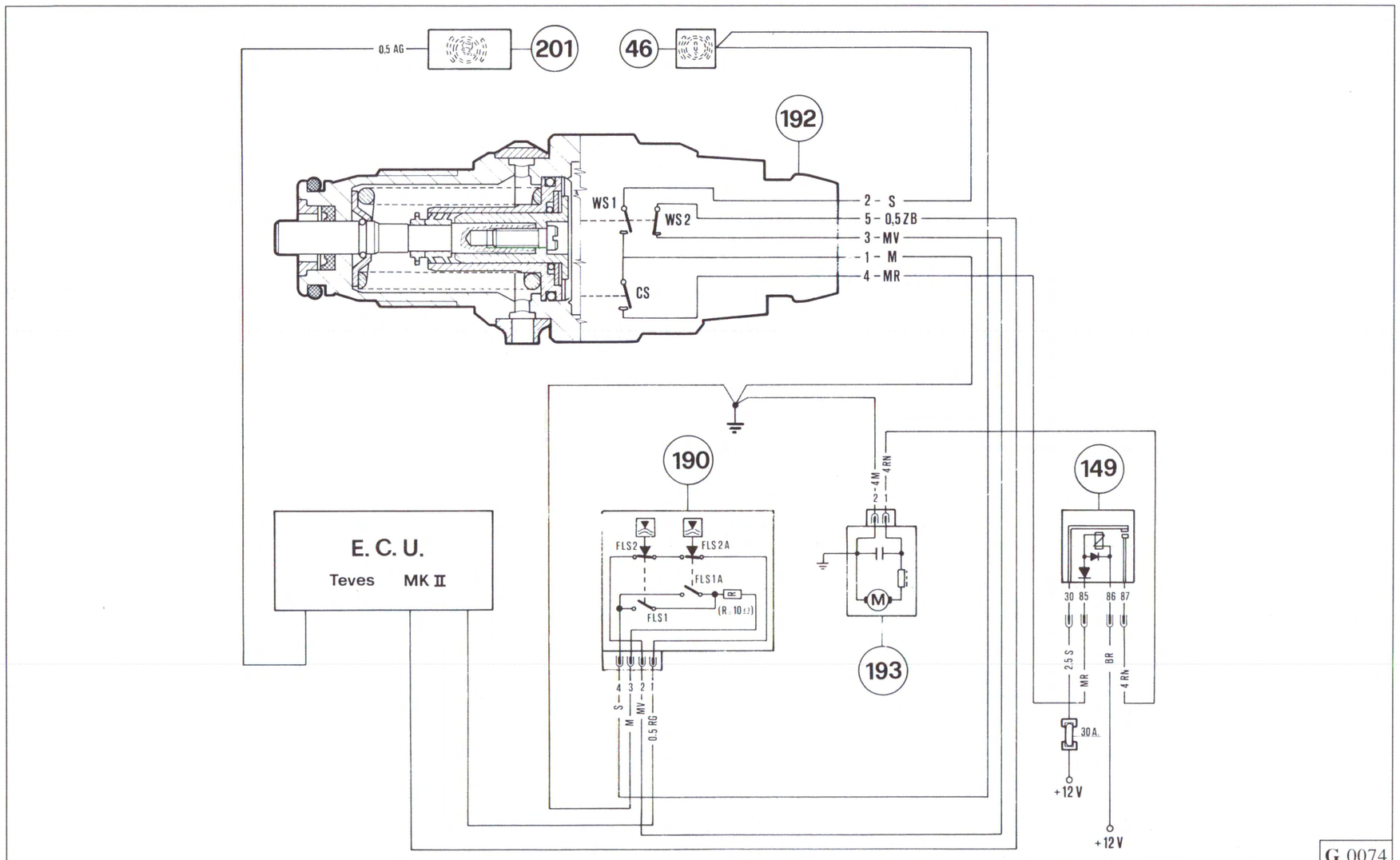

Fig. 17

Notes:

a - With the electric pump off and brake fluid in accumulator at bottom pressure limit (brake failure warning light on), 4 ÷ 6 normal servo-assisted braking manoeuvres are still available, albeit without ABS operation at the front wheels. If braking is continued under these failure conditions, both brake servo and rear brake efficiency are gradually reduced until non-existent. Front brakes remain efficient, however, remain efficient though without servo-assistance to ensure emergency braking.

b - The accumulator cannot be repaired. It must be replaced in case of a gas leak.

c - **WARNING:** before carrying out any operation that involves opening of hydraulic unit, ensure that brake fluid is no longer under pressure.

For this purpose:

— remove battery.

— Operate brake pedal at least 25 times until it stiffens.

D - Pressure switch

This is included in the high pressure circuit. It operates three microswitches simultaneously as follows Fig. **17**:

CS: controls electric pump relay:

a - when pressure increases, it stays closed until 180 bars then opens

b - When pressure decreases, it stays open until 140 bars then closes.

Its function is to maintain the high pressure circuit at between 140 ÷ 180 bars.

WS1: connected in parallel with reservoir minimum fluid level switch. Causes **brake failure warning light** to come on when pressure falls below 105 bars (danger of inefficient brake servo operation).

a - when pressure increases, opens at 135 bars.

b - When pressure decreases, closes at 105 bars.

WS2: supplies a signal to the ABS control unit in line with a second minimum level switch in the reservoir in order to enable the antiskid function if pressure (and reservoir level) exceeds minimum threshold.

a - When pressure increases, closes at 135 bars.

b - When pressure decreases, opens at 105 bars.

If the pressure falls below 105 bars, the control unit cuts out antiskid device at front wheels and lights the relevant instrument panel warning light.

DELAY VALVE AND BRAKING CORRECTOR

A delay valve (**8**, Fig. **7**) and a braking corrector (**9**, Fig. **7**) are connected in line on the rear brake calliper supply line. They perform the following functions:

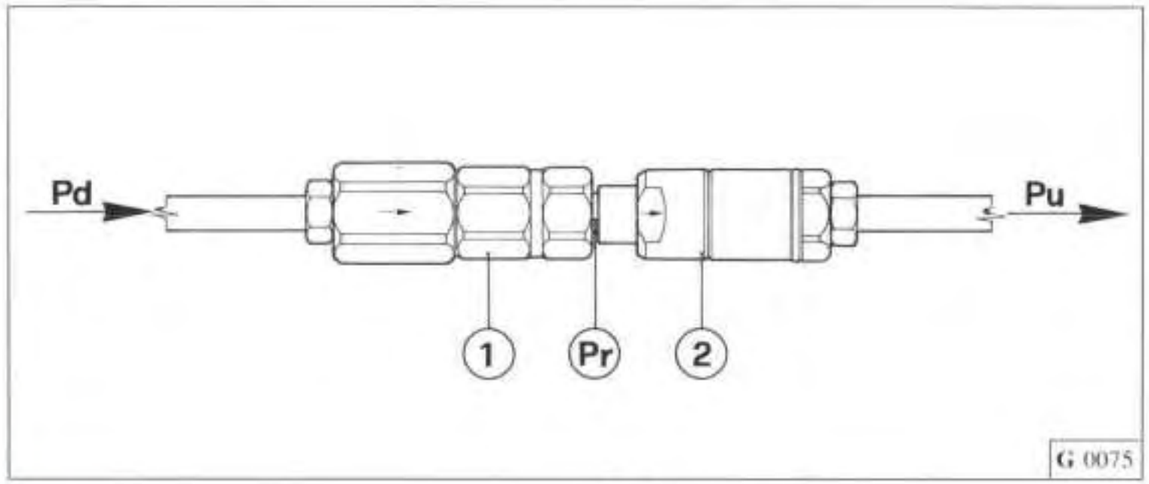

Fig. 18

1 - Delay valve;
2 - Braking corrector;
Pd - Dynamic pressure (from brake servo);
Pr - Reduced pressure from valve (1);
Pu - Output pressure, to rear brake callipers.

1 - Delay valve

Prevents the rear brake callipers, supplied directly by dynamic pressure (or brake servo pressure), from braking before the front brake callipers.

With reference to Figs. **18** and **19**, this valve supplies output pressure (**Pr**) equal to input pressure (**Pd**) reduced by 8.5 bars.

2 - Braking corrector

Performs the following two functions:

a - prevents the anti-skid system from acting on rear brakes at average rates of deceleration.

b - Ensures even braking (as in a conventional braking system) if the anti-skid system should fail.

The braking corrector starts to cut in when its input pressure (**Pr**, Fig. **19**) reaches 20 bars and restricts output pressure increases (**Pu**) to 45 % of input pressure increases.

Resulting pressure **Pu** is indicated in the following graph (Fig. **19**).

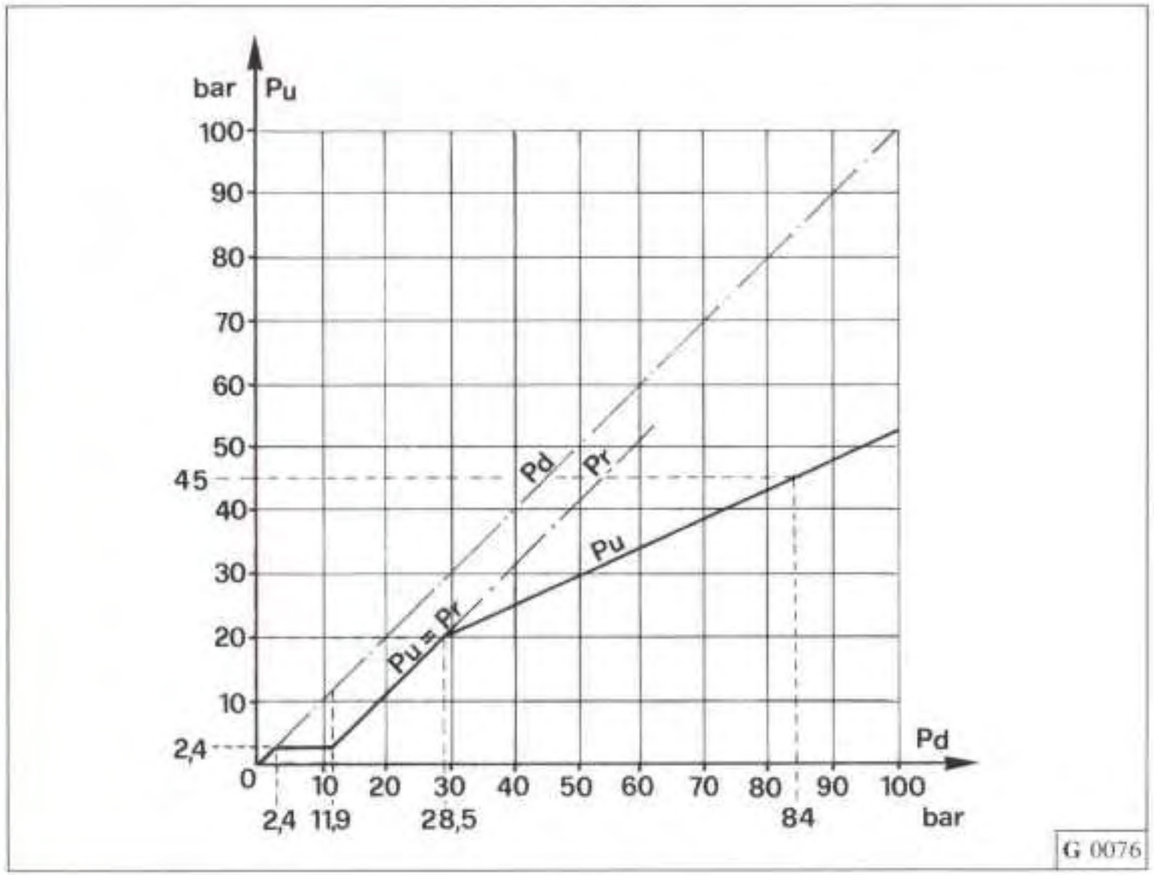

Fig. 19

DESCRIPTION OF ELECTRICAL UNIT OPERATION

The system consists of sensors, actuators, electronic control unit and associated wiring, as shown in electrical diagram (**Sez. L**). Operations are summarised in the following flow diagram (Fig. **20**).

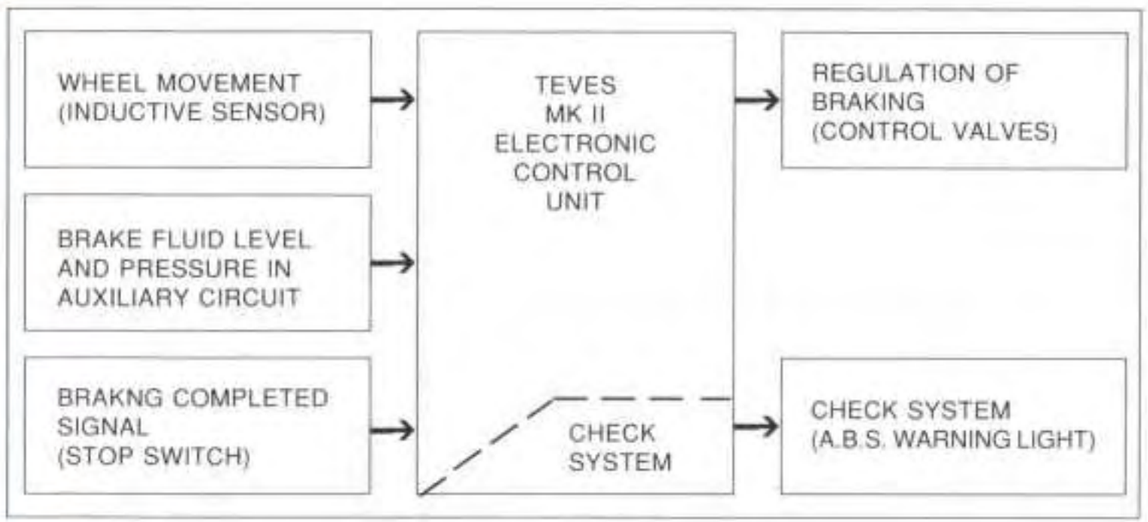

Fig. 20

Fig. 20

Note: wires to pins **14** and **32** do not carry signals to the control units (pins **14** and **32** are empty) but are used only for factory test apparatus not available to Service Network.

1 - (-) E.C.U. earth;
2 - (+) Supply voltage - Key on -;
3 - (+) 12 Volts from main relay;
4 - (-) Right rear sensor signal;
5 - (-) Left front sensor signal;
6 - (-) Left rear sensor signal;
7 - (-) Right front sensor signal;
8 - (+) 12 Volts to main relay (activ.);

9 - To pressure and level switches;

10 - From pressure and level switches;

11 - (-) Valves earth;
12 - Stop switch signal;
14 - (-) 180/140 bar press.switch. (ground);
15 - (+) Right front delivery valve control signal;
16 - (+) Left front return valve control signal;
17 - (+) Rear delivery valve control signal;
18 - (+) 12 Volts for main control valve;

20 - (+) 12 Volts from main relay;
22 - (+) Right rear sensor signal;
23 - (+) Left front sensor signal;
24 - (+) Left rear sensor signal;
25 - (+) Right front sensor signal;
26 - (+) Diagnosis socket;
27 - (-) ABS warning light control signal;
32 - (+) 12 Volts from activ. pump relay;

33 - (+) Rear return valve control signal;

34 - (+) Right front return valve control signal;
35 - (+) Left front delivery valve control signal.

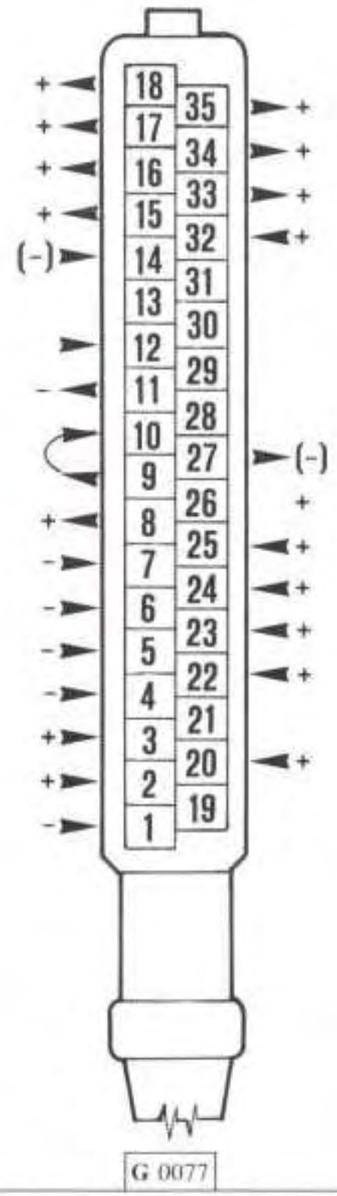

Fig. 21 - Electronic control unit connector.

NOTES ON SOME ELECTRICAL COMPONENTS

Wheel movement sensors

One for each wheel, inductive type with magnetic core and electrical winding. Front sensors are fitted to king pins, rear sensors to hub carriers (Figs. **22** and **23**).

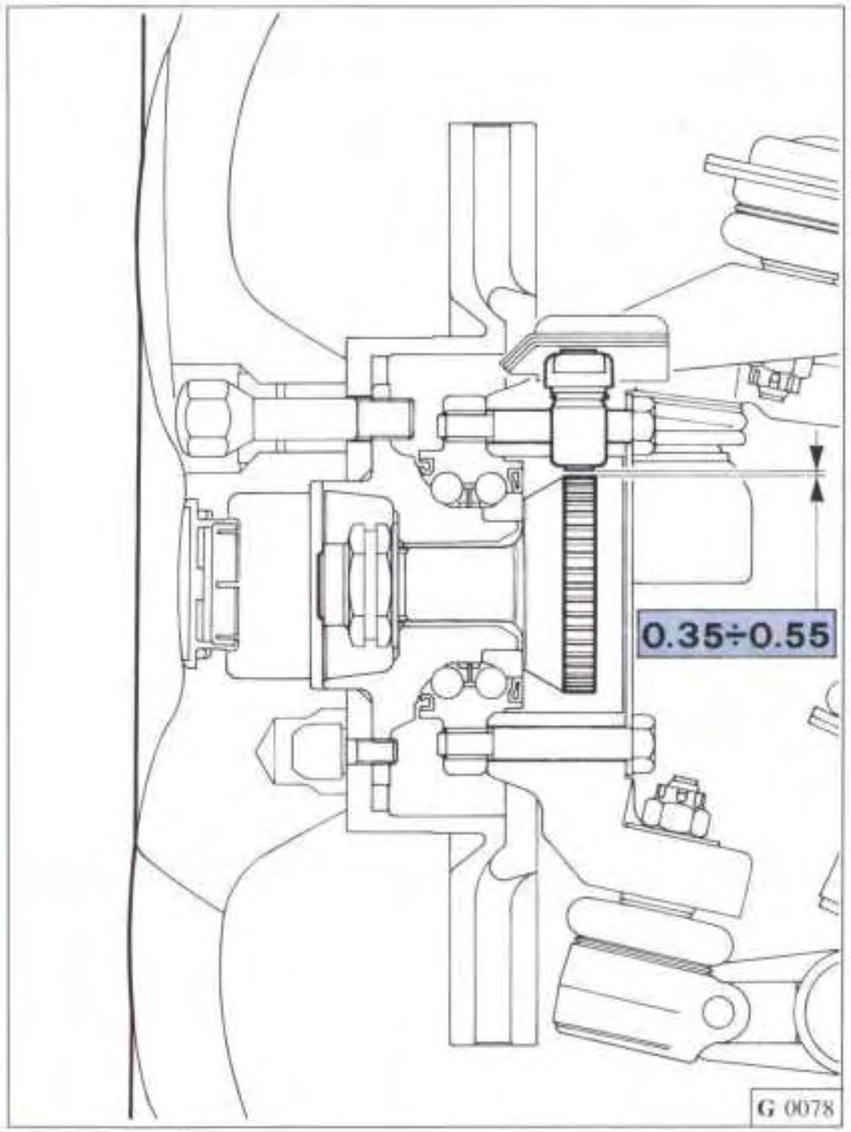

Fig. 22 - Front wheel sensor.

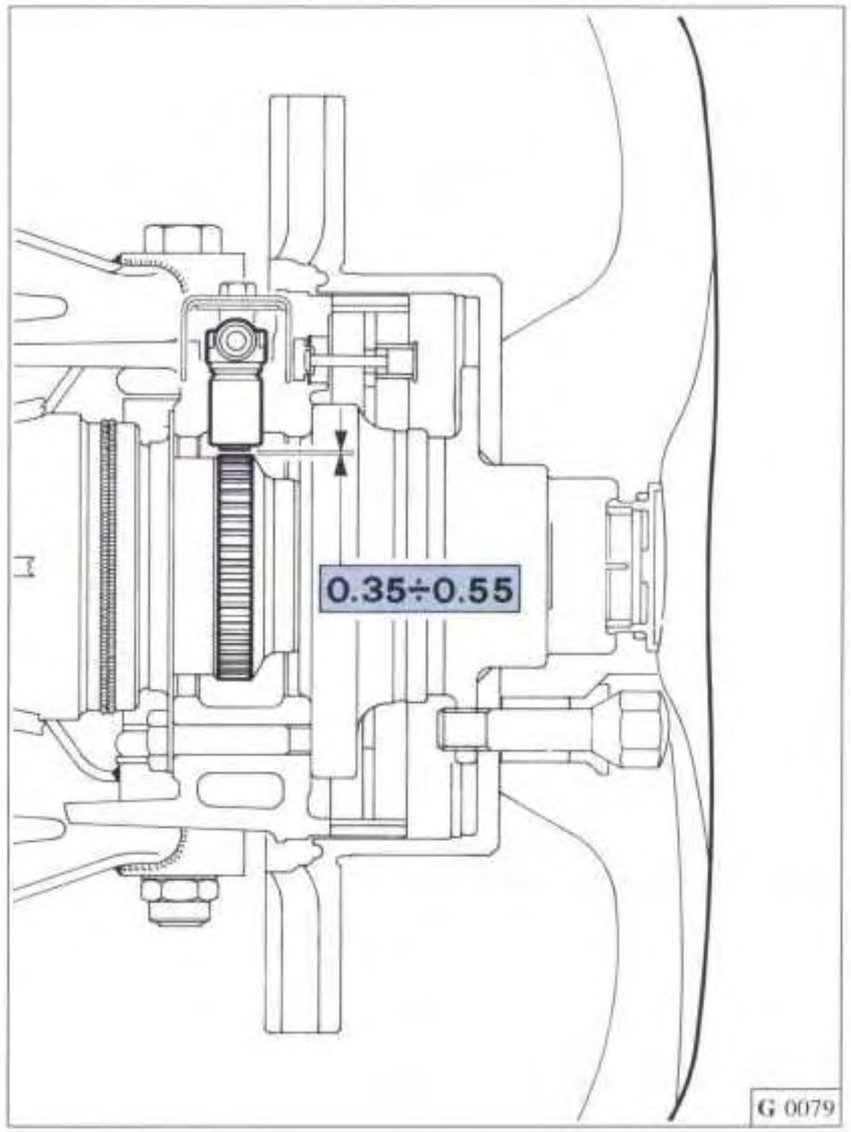

Fig. 23 - Rear wheel sensor.

Each sensor facing a ring gear (100 teeth at the front and 105 at the rear) integral with the wheel hub, thus leaving **a gap of 0.35 ÷ 0.55 mm, a notwithstanding the wheel position.**

The rotation of each wheel generates a series of electrical impulses in the corresponding sensor. These constitute an alternate voltage (with frequency and intensity proportional to wheel speed) that is sent to the control unit through a coaxial lead.

The control unit is thus provided with continuously updated information on the speed of each wheel.

STOP switch

Sends brake pedal released signal (braking completed) to control unit so that electronic equipment can quickly be prepared for subsequent ABS operation.

Notes:

1 - The Teves MKII Electronic Control Unit is responsible only for piloting the anti-skid control valve (incorporated in the main hydraulic unit) and also the anti-skid warning light on the instrument panel. It plays no part in the auxiliary hydraulic unit. The high pressure electric pump is controlled by the pressure switch (140 ÷ 180 bar).

2 - When the car sets off, the anti-skid function is enabled at speeds over 7.5 kph.

Brake warning lights

In addition to the parking brake warning light (**3**, Fig. **24**) which is also controlled by the front brake pad wear indicators and not connected to the system in question, there are two brake warning lights, as follows:

1 - Brake failure warning light (**1**, Fig. **24**). This lights:

a - when brake fluid level is low.

b - When brake servo hydraulic pressure is low.

c - During start-up check when:

- ignition key is in **MARCIA** position in European car versions.

- The ignition key is turned to **START** (position in US car versions.

2 - ABS warning light (**2**, Fig. **24**)

This comes on according to the following sequence:

a - **when key is turned to START position**, it comes on for a few seconds while the control unit checks all connected circuits.

The warning light then goes out if no faults are found.

Notes:

— These preliminary checks involve the activation of each control valve for a period of 7 m/secs.

If the brake pedal is kept down the driver can feel this phase as a series of knocks on the pedal.

— If the **accumulator is not charged** initially, the warning light will not go out until the accumulator is charged. In this case the warning light may stay on for as long as 30 seconds.

b - During start-up, **with key in START position**, the light comes on weakly then goes off.

c - When the key is turned **from START to MARCIA position**, the comes on again briefly then goes off.
If the ABS warning light stays on indefinitely after start-up, there must be an electrical fault in the system.

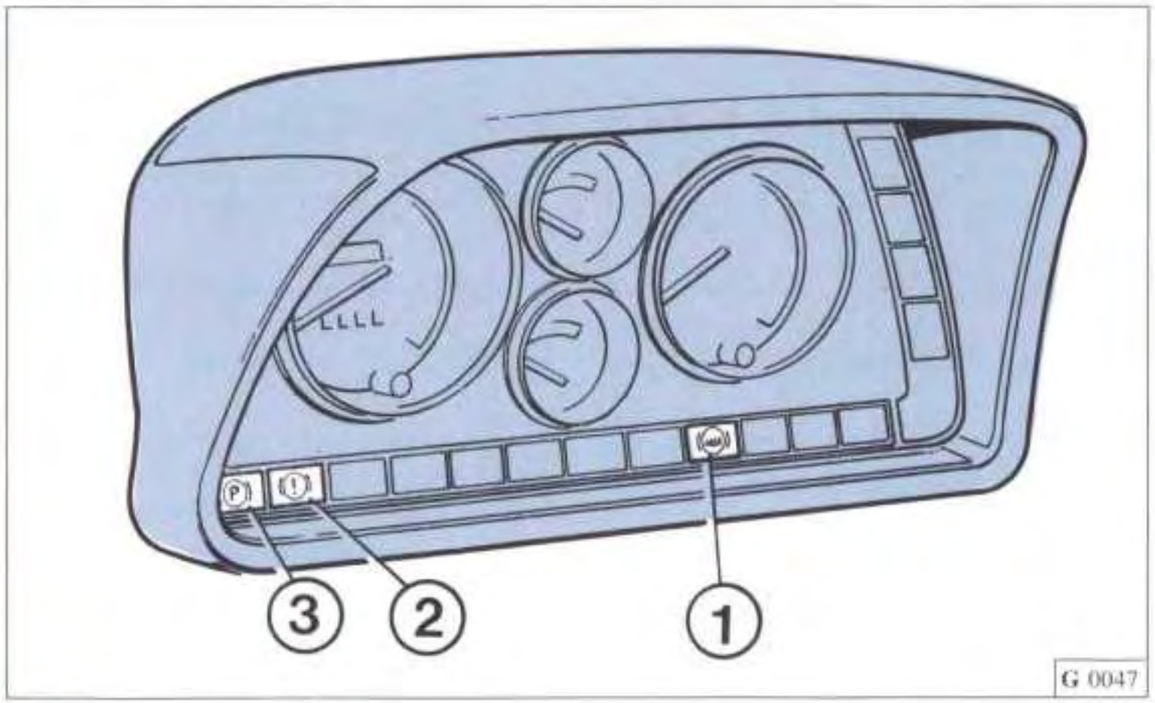

Fig. 24 - Brake warning lights

1 - ABS warning light;
2 - Brake failure warning light;
3 - Parking brake and front brake pad wear warning light.

PRESSURE TEST

To be carried out if the electric pump is not working properly or brake servo is inefficient.

Test preparation

a - Turn off ignition, pump brake pedal repeatedly (about 25 times) to unload pressure until pedal stiffens.

b - Remove adjustable fitting from high pressure line, accumulator end, and connect pressure gauge (Ferrari tool no **95970035**) (Fig. **25**).

c - Operate the electric pump briefly to empty the pressure gauge, then pump the brake pedal again to unload hydraulic pressure.

d - Set a stop-watch.

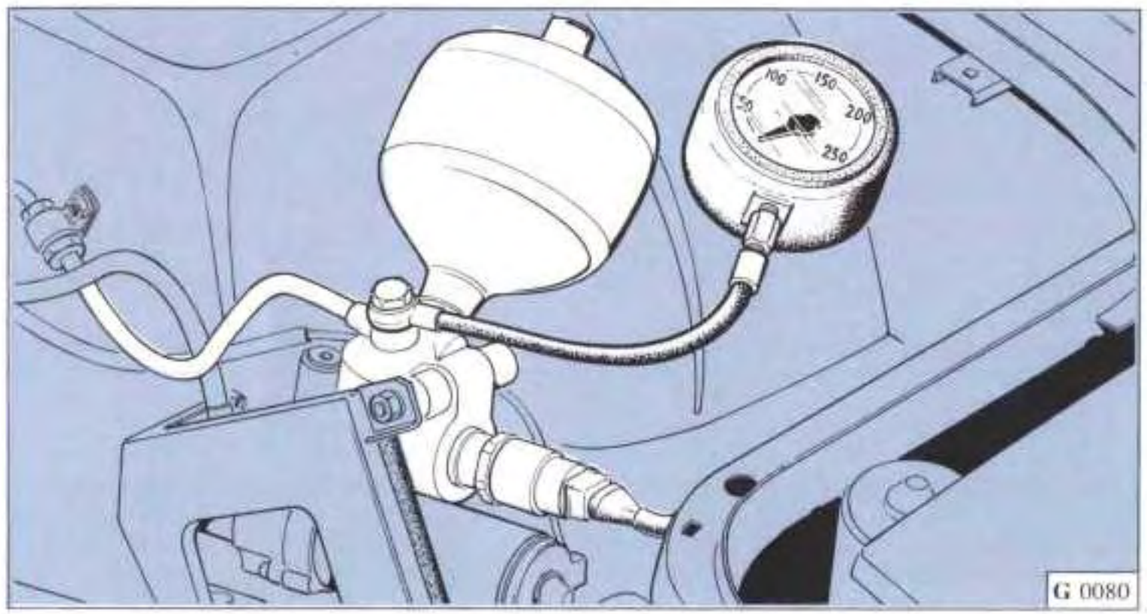

Fig. 25 - Connection of pressure gauge for hight pressure check.

COMPONENT CHECKED	OPERATION TO CARRY OUT	TEST VALUES	OPERATIONS IF VALUES NOT AS SPEC.
1 - ACCUMULATOR gas pressure	— Turn ignition to MARCIA and start stopwatch	— Immediately after pump start-up, pressure must be 40 ÷ 80 bars	— Replace accumulator
2 - PRESSURE SWITCH contacts (see also 5)	— Check ABS and brake failure w/l's — Check pump shut-off pressure	— W/l's go off when P = 135 bar max P = 180 ± 10 bar	— Check electrical wiring — Replace pressure switch
3 - ELECTRIC PUMP EFFICIENCY	— Measure time taken for pump to stop, then turn off ignition	— 60s MAX	— Check electrical wiring and supply voltage — Replace electric pump
4 - Hydraulic seal	— Let pressure stabilises for 3 mins after pump shut-off. — Measure pressure drop over next 5 mins.	— Pressure drop (MAX 10bar/5m) (with T = 25 C max.)	— Unload pressure and plug delivery line to brake servo — Repeat test to see if leak is inside pump unit — Replace defective unit (electric pump or brake servo)
5 - PRESSURE SWITCH contacts (see also 2)	— Ignition in MARCIA position — Operate brake pedal	— Pump cuts in at 140 ± 10 bar	— Check electrical wiring — Replace pressure switch
	— Remove pump fuse — Pump brake pedal	Almost simultaneous lighting of: — ABS w/l and — Brakefailure w/l at: 105 ± 5 bars.	

CHECK SYSTEM

Introduction

The electronic control unit is designed to offer great operational safety. It contains two identical circuits each of which runs the same programs, receives and processes the same signals and decides operations to be carried out.

Data processed by the two circuits is cross-checked several times a second. If only one factor does not meet specified requirements during these checks, the control unit signals an alarm which lights up the ABS warning light and renders the control unit inoperative while the defect persists.

In this case the anti-skid system is deactivated and only the normal braking system operates.

Note:
in the specific case of insufficient hydraulic pressure (or low brake fluid level), the ABS warning light comes on (and also the Brake Failure warning light) but the anti-skid system is deactivated only for the front wheels - it stays on for the back axle.

Some defects are reported directly by the instrument panel light whereas other electrical faults, even if only temporary, are stored in the control unit in

the form of error codes. They are saved in a non-labile memory so that they can be decoded later, even after a considerable time lapse.

Possible anomalies

A - Anomalies indicated directly by ABS warning light without corresponding error code.

1 - ABS warning light always on

Possible causes:

a - no electrical supply to ABS control unit (fuse, relay, connector not properly fitted).

b - Internal control unit fault sufficient to deactivate anti-skid function.

c - Internal control unit fault in warning light control circuit.

d - Short circuit of warning light earth lead.

2 - ABS light never on

(even when ignition switched on): possible causes:

a - Bulb burnt out.

b - Warning light electrical contacts broken.

c - Internal control unit failure, in warning light control circuit.

3 - ABS warning light flashes irregularly

Probable defect or oxidation of warning light electrical contacts.

4 - ABS warning light operates normally upon start up then, instead of staying off, **comes back on at over 8 kph**; probable internal failure of the test circuit control unit.

B - Anomalies indicated by the ABS warning light in the form of numerical codes (two figure numbers from 11 to 78).

The operator may request decoding of faults stored in the electronic control unit whether these are still present at the time of the check or occurred by chance then disappeared (e.g. radio interference induced by external environment).

Proceed as follows:

1 - with the car at a standstill (do not turn wheels if the car is raised), check that ignition is off.

2 - Insert a normal fuse (5 or 10 amps) in fuse holder **E**, Fig. **26** (in order to earth control unit pin no. 26).

3 - Turn ignition key to **MARCIA** position and observe the behaviour of the ABS warning light which should have come on in the meantime. If it goes off after 4s and stays off, the control unit has no electrical defects.

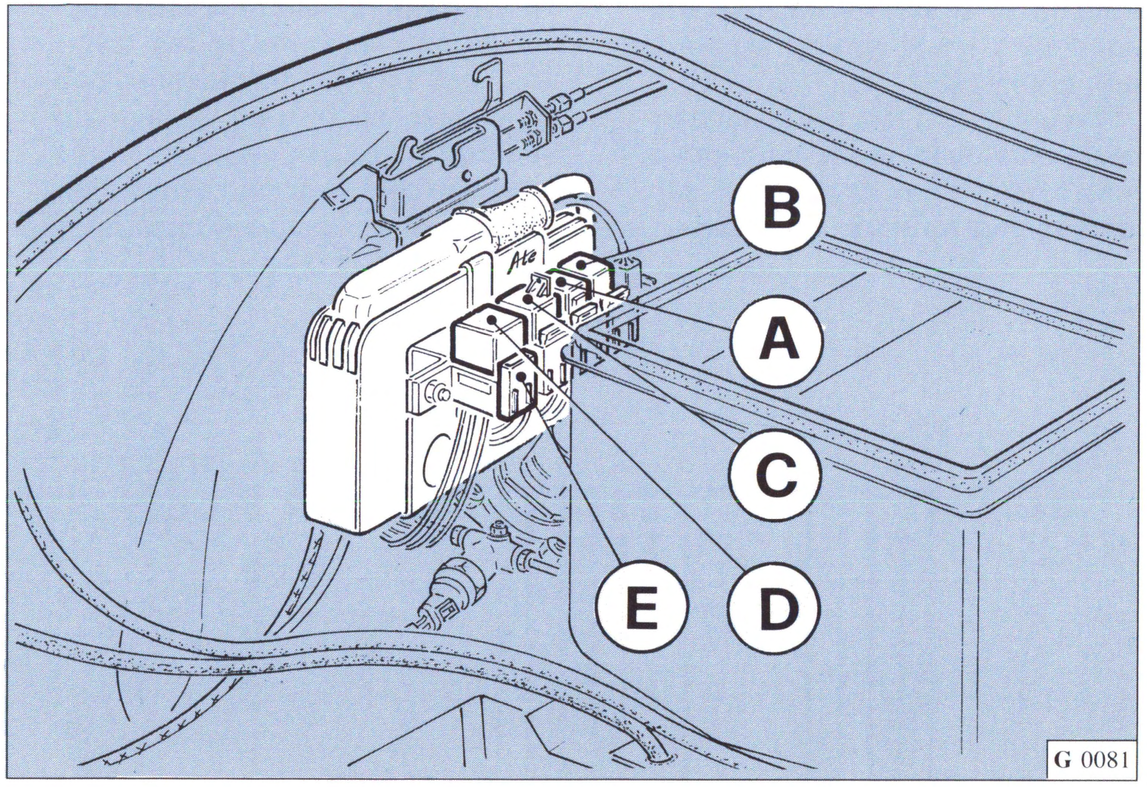

Fig. 26

A - Electrical pump relay;
B - Main relay;
C - ABS control relay;
D - Diode holder;
E - Fuse holder for check system.

4 - In the case of failure indication, after 4s the light goes off for 1/2s then carries out a series of 1/2s flashes at 1s intervals. It then goes off for some 2s immediately afterward an then starts to flash again (1/2s each) before staying lit indefinitely (Fig. **27**).

The number of flashes in the first and second sequence form the tens and units of the failure code respectively (32 in the example in Fig. **27**). The type of failure may then be read off the code table shown on page **50**.

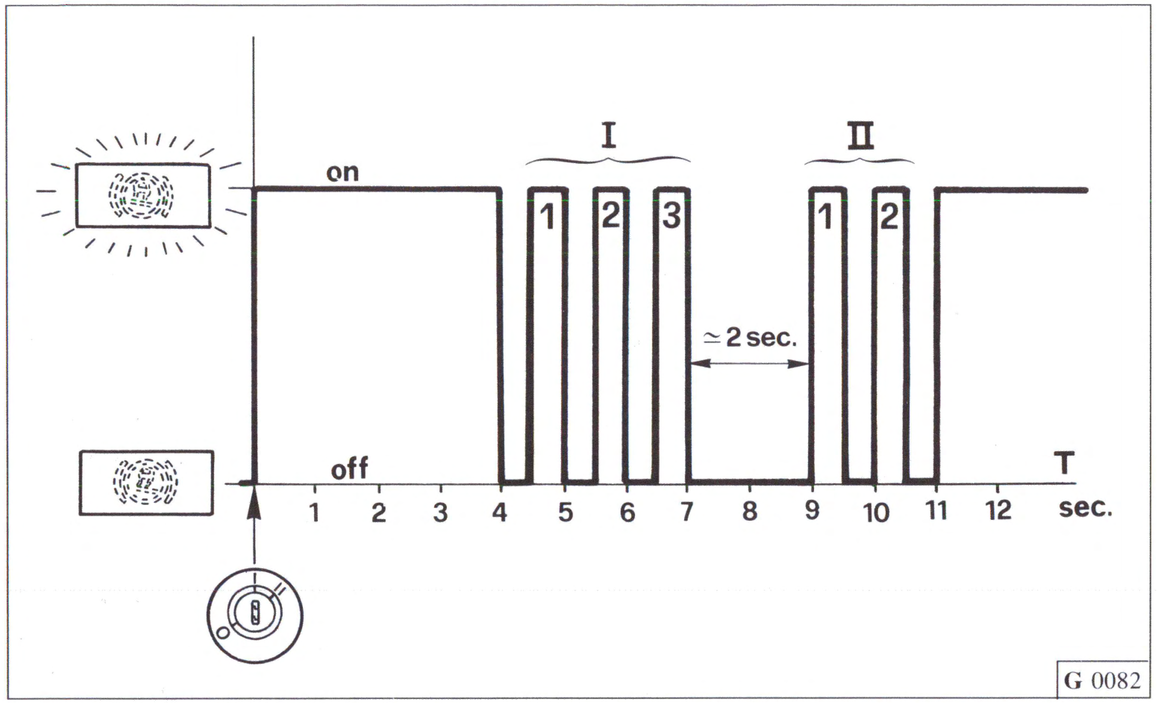

Fig. 28

— **The check system of this control unit** can store up to seven **differrent anomalies** at the same time, each identified by a two-figure numerical code (from 11 to 78) **provided that the first numbers of each code are all different (tens)**. In the case of **two different anomalies with codes belonging to the same groups of tens, one only will be stored** and the check system will not report the second failure.

5 - To complete the error code display sequence, extract and replace fuse **E**, Fig. **26**, **leaving the ignition key in position MARCIA position**.
Each time the fuse is inserted, the warning light shows a new error code. The sequence is complete when the ABS warning light stays on indefinitely after fuse insertion without flashing.
The operator may ask to see **the error code sequence again**.
The device need only be reset and the ignition key turned once more to **MARCIA** position.

Note: control valve failure involve automatic control unit cut-out and consequent inability to memorise further anomaly codes.
If the check indicates valve failure, it will therefore be necessary to repair the valve immediately and road test the car in order to record and identify further anomalies.

6 - Deletion of memory

After displaying all anomalies and carrying out all necessary repairs, remove fuse **E**, Fig. **26** and road test the car.

When a speed of 40 kph has been **exceeded**, if no further faults occur or are identified, the memory is deleted.

In the case of further anomalies, the ABS warning light comes on to show that more checks and repairs need to be carried out.

Note: the memory can be deleted **only if all error codes memorised have been displayed at least once**, to the end of the sequence.

LIST OF FAILURE CODES

FAILED COMPONENT FOR CIRCUIT		TYPE OF FAILURE	CODE	REPAIR INSTRUCTION
ELECTRONIC CONTROL UNIT		Interference or failure in redundancy circuit inside control unit	1.1	Check wiring. If problem remains, replace control unit.
		Internal failure	1.2	Replace the control unit
VALVES	Main	Valve or connecting wire defective. Defect in control unit (power transistor)	2.1	Check valve resistances and continuity. Also check wiring and connectors.
	Left front delivery		2.2	
	Left front return		2.3	
	Right front delivery		2.4	
	Right front return		2.5	
	Rear delivery		2.6	
	Rear return		2.7	
SENSOR	Left front	LACK OF SIGNAL due to short-circuit or breakage (or internal control unit failure).	3.1	Check sensor resistance and continuity. Check also wires and connectors.
	Right front		3.2	
	Right rear		3.3	
	Left rear		3.4	
SENSOR	Left front	INTERMITTENT LACK OF SIGNAL due to faulty electrical contacts or occasional short circuit. Irregular ring gear movement. Excessive bearing play. Gap too large or small.	3.5	Check sensor resistance and continuity. Check also wires and connectors. Check ring gear rotation, bearing gap and play.
	Right front		3.6	
	Right rear		3.7	
	Left rear		3.8	
SENSOR	Left front	Different speed signal to other sensors due to anomalous signal, excessive gap or failure to install ring gear..	4.1	Check gap and ring gear. Check sensor installation and bearing play.
	Right front		4.2	
	Right rear		4.3	
	Left rear		4.4	
DELIVERY VALVE	Left front	Lack of hydraulic efficiency noted at speeds over 40 kph	5.1	Carry out hydraulic check on valve.
	Right front		5.2	
	Rear		5.3	
			5.4	
SENSOR	Left front	Occasional lack of sensor signal: sensor not properly fitted or gap too large.	5.5	As 41 - 42 - 43 - 44
	Right front		5.6	
	Right rear		5.7	
	Left front		5.8	
Brake fluid level indicator circuit low or insufficient pressure.		Contact earthed or short circuit with other positive lead.	6.1	Check minimum pressure and level microswitch circuits.
SENSOR	Left front	Irregular signal at speeds UNDER 40 kph, durin control valve operation.	7.1	Check sensor connection and earth, sensor installation, bearing play and hub in general. Check hydraulic valve operation.
	Right front		7.2	
	Right rear		7.3	
	Left rear		7.4	
SENSOR	Left front	Irregular signal at speeds UNDER 40 kph, noted as discontinuous speed large.	7.5	Check sensor and control unit earth. Check sensor installation bearing play and gap.
	Right front		7.6	
	Right rear		7.7	
	Left rear		7.8	

NOTES

1 - If the suggested repairs do not resolve the problem, replace the control unit.

2 - If the anti-skid warning light stays on without any error code, check control unit power supply and warning light earth lead before replacing control unit.

3 - If repair instructions given for error codes 71 - 72 - 73 - 74 do not produce results, carry out operations given forcodes 51 - 52 - 53 - 54.

4 - It repair instructions given for error codes 75 - 76 - 77 - 78 do not produce results, cany out operations given for codes 35 - 36 - 37 - 38.

5 - Fauls corresponding to codes from 71 to 78 are temporary and cause only temporary inhibition of anti-skid function. These faults my be memorised without the driver realising.

ELECTRICAL SYSTEM CHECK USING INTERCONNECTOR AND MULTISCALE METER

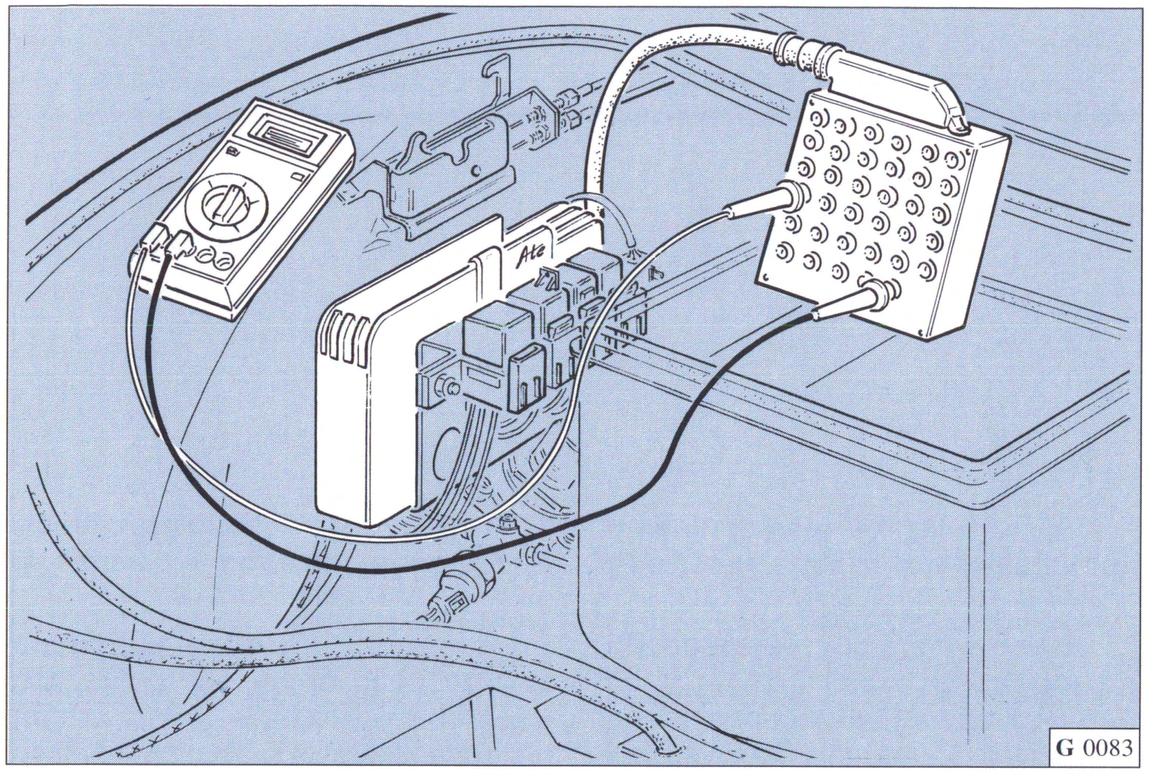

Fig. 28

Introduction

The following check operations are not necessary to resolve repair problems since the indications provided by the check system are sufficient.

These operations may, however, be carried out to check electrical specifications of main components and as an aid to the check system.

Before carrying out these operations, check the following components:

1 - Pump fuse;
2 - Main ABS fuse;
3 - Relay fuse;
4 - Relay installation;
5 - Pump connector;
6 - Main valve connector;

7 - ABS valve connector;
8 - MIN level transmitter connectors;

9 - Pressure switch connector.

Test preparation

With the ignition key in **spento** (**OFF**) position, remove the 35-pin connector from the anti-skid control unit and fit the interconnector (Ferrari tool, dwg. no. **95970024**). **Leave the control unit unconnected** (Fig. **28**).

Carry out checks according tothe diagnosis card no. 20.

CONTROL VALVE OPERATION CHECK

Introduction

This check should also be carried out as an aid to the check system.

Preparation

1 - Turn ignition off.

2 - Remove ABS control unit from car system connector.

3 - Install 35-pin connector (Ferrari dwg. no. **95970024**) and connect to car connector **without turning on** anti-skid control unit (Fig. **28**).

4 - Turn ignition key to **MARCIA** position and wait until the accumulator has charged (carry out hydraulic pressure checks in case of doubt).

5 - Ignition key **OFF** again.

6 - Using an external by-pass lead, connect pins 2 and 8 (to supply 12V to pins 3 and 20 when ignition on).

Main control valve

1 - With external by-pass lead protected by a fuse (10 A), connect pins 3 and 18.

2 - Press brake pedal and hold down.

3 - Turn ignition key to **MARCIA** position.

4 - The brake pedal should spring back up and feel **stiffer** than before.

Warning: do not leave the key in MARCIA position longer than 30 seconds to avoid valve overheating.

5 - Ignition key off; remove connection between pins 3 and 18.

Delivery and return valves

— Raise car so that wheels can be turned by hand.

— Ensure that the accumulator remains charged throughout the tests

DELIVERY SELENOID	Pins (12V) to be connected with key off (in addition to 2 and 8)	Key in MARCIA postion, then press brake pedal	Brake pedal pressed and key OFF
Left front	3 and 35	Wheel free	Wheel locked
Right front	3 and 15	Wheel free	Wheel locked
Rear	3 and 17	Wheel free	Wheel locked
RETURN VALVE	Pins (12V) to be connected with ignition off (in addition to 2 and 8)	Brake pedal pressed down	
		Ignition key OFF	Key in MARCIA position
Left front	3 and 16 + 20 and 35	Wheel locked	Wheel free
Right front	3 and 34 + 20 and 15	Wheel locked	Wheel free
Rear	3 and 33 + 20 and 17	Wheel locked	Wheel free

— During each of the tests in the table, **never leave the ignition key on for longer than 30 seconds** to avoid valve overheating.

If the operation of one or more valves is not as described, check associated electrical wiring (see **Sez. L**). Replace hydraulic unit if no wiring anomalies are found.

HANDBRAKE

Adjustment

Excess lever travel means either brake shoe wear or a loose cable.

First of all adjust the clearance between brake shoes and drum, acting on the toothed sleeve through the hole on the brake disc, until the disc itself is well locked.

Turn the sleeve **1** in the opposite direction, so that the disc can turn freely.

Then act on the handbrake lever to lock the rear wheels within the first 3 - 4 clicks.

If required, act on the counter-nuts **A** of the control cable (Fig. **29**).

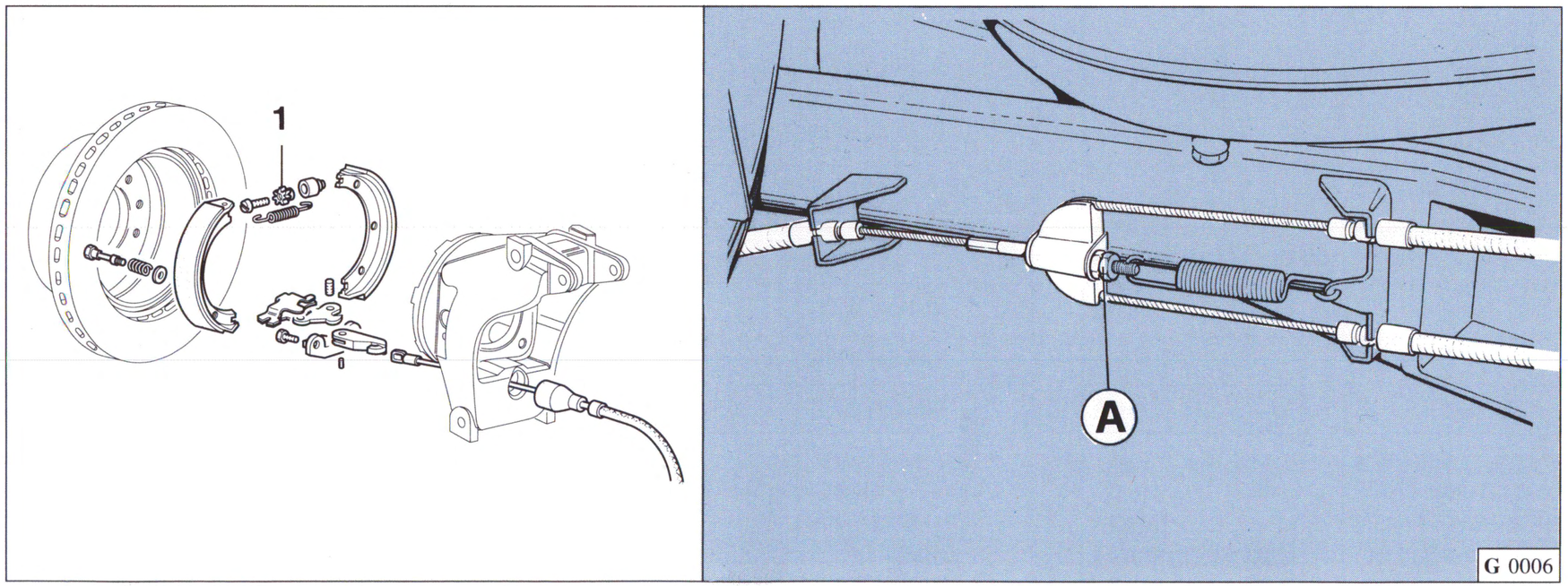

Fig. 29 - Adjusting handbrake.

F355

May '97

BRAKES G1

INDEX

- General information **G.3**
- Specification and data **G.3**
- Brake booster **G.8**
- Adjustment of features brake pedal free travel **G.9**
- Brake calipers **G.11**
- Brake pads removal and replacement **G.12**

- Hand brake adjustment **G.15**
- ABS system **G.17**
- Theory **G.19**
- Operation **G.23**
- Components **G.24**
- Adjustment steps **G.29**
- ABS adjustment cycle **G.31**
- System diagnosis with SD-1 Diagnosis System **G.34**
- ABS wiring diagram **G.39**

General features

The braking system is formed by the following components (Fig. **1**):

- Self-ventilated disc brakes on the four wheels.
- Coaxial cylinder hydraulic pump connected to brake booster **1**.
- Two independent and crossed hydraulic circuits (I system).
- Emergency and hand brake **5** with mechanical manual control, acting on rear wheels.
- Brake fluid reservoir with float for oil minimum level, connected to the dashboard panel warning light.
- Warning light **13** on the dashboard for low oil level in the reservoir and/or too high front pad wear (see note on page **G5**).
- Warning lights on the dashboard for system operation check (see page **G7**).

SPECIFICATION AND DATA	Front	Rear
Brake system	ventilated disc in cast iron	ventilated disc in cast iron
Brake discs		
• Diameter ..... mm	300	310
• Rated thickness ..... mm	28	24
• Min. acceptable after grinding ..... mm	26	22
• Flatness tolerance with disc on hub (measured on dial gauge) ..... mm	0.075	0.075
• Parallelism circumferentiel tolerance on both surfaces ..... mm	0.015	0.015
• Max. disc circumferential surface roughness ..... µ	1.2	1.2
Brake calipers	BREMBO P4. 36/40 C	BREMBO P4. 36/40 C
• Cylinder diameter ..... mm	36/40	36/40
• Average braking surface (one pad) ..... cm^2	42.7	42.7
Brake pads	GALFER 3320 FF	GALFER 3320 FF
• Friction material min. thickness ..... mm	3	3
Clearance adjustment between seal and disc	automatic	automatic
• Braking correction intervention pressure ..... bar		20
Hand brake (operating only on rear wheels)		mechanically operated

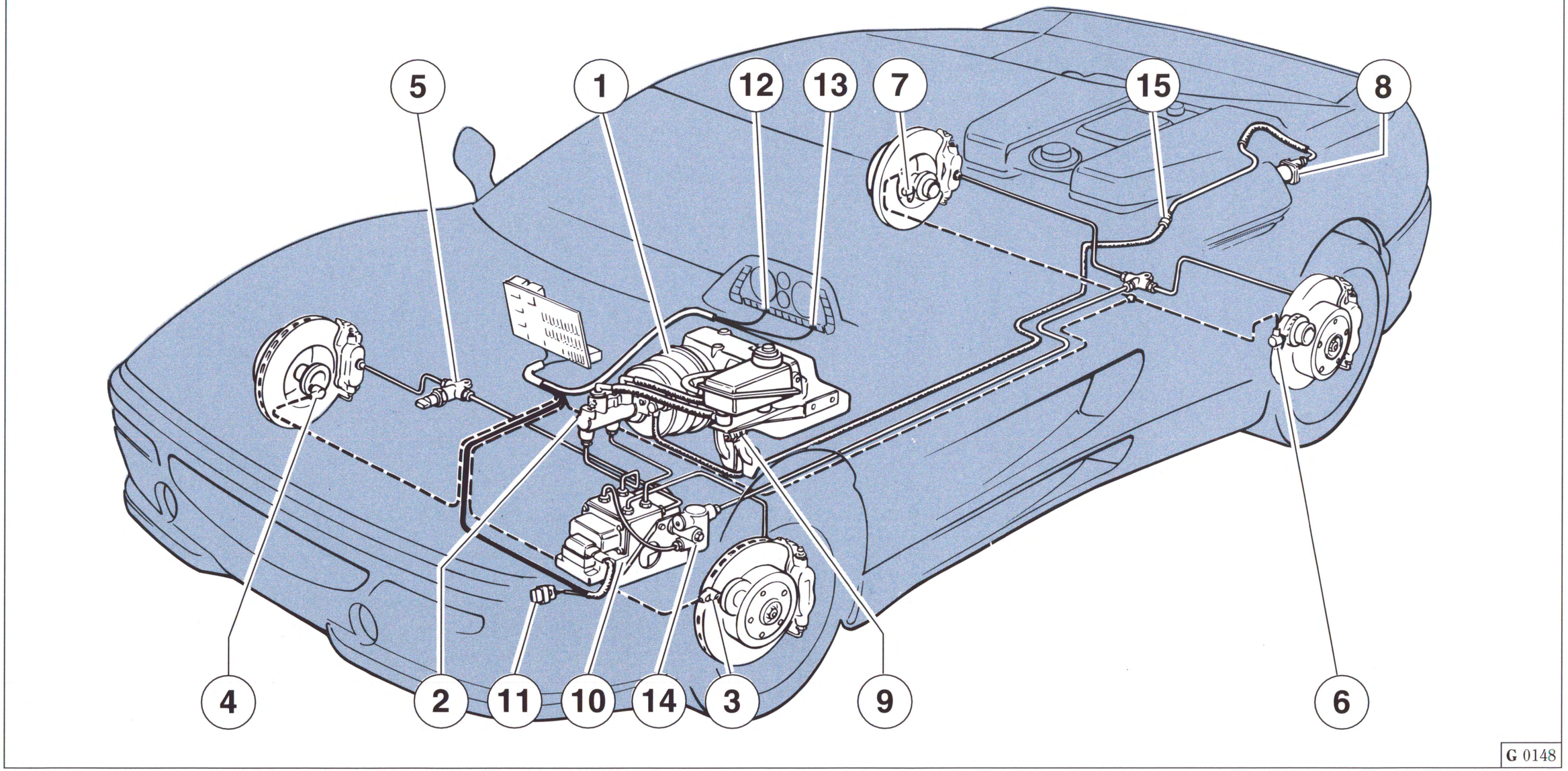

Fig. 1 - Braking system and ABS - ASR system parts

1 - Brake booster; **2** - Master cylinder; **3** - Left front sensor; **4** - Right front sensor; **5** - Pressure switch for damper setting adjustment system; **6** - Left rear sensor; **7** - Right rear sensor; **8** - Mechanical vacuum meter; **9** - Stop light switch; **10** - ABS hydraulic control unit (integrated to the ABS ECU); **11** - Diagnosis socket; **12** - ABS warning light; **13** - Brake failure warning light; **14** - Braking corrector; **15** - Check valve.

Brake fluid reservoir

The reservoir is placed in the front compartment and is common to the clutch reservoir.

Check if the fluid in the reservoir **A** is always next to the max. level.

The symbol **B** on the plug indicates that the reservoir contains synthetic brake fluid.

WARNING!

Using mineral fluids you would damage irreparably the rubber seals of the braking system.

WARNING

Before unscrewing the reservoir plug, disconnect the electrical connections.

Every now and then check the brake warning light (Fig. 3, re. 2) operation by slightly pressing the reservoir plug, with ignition key in "II".

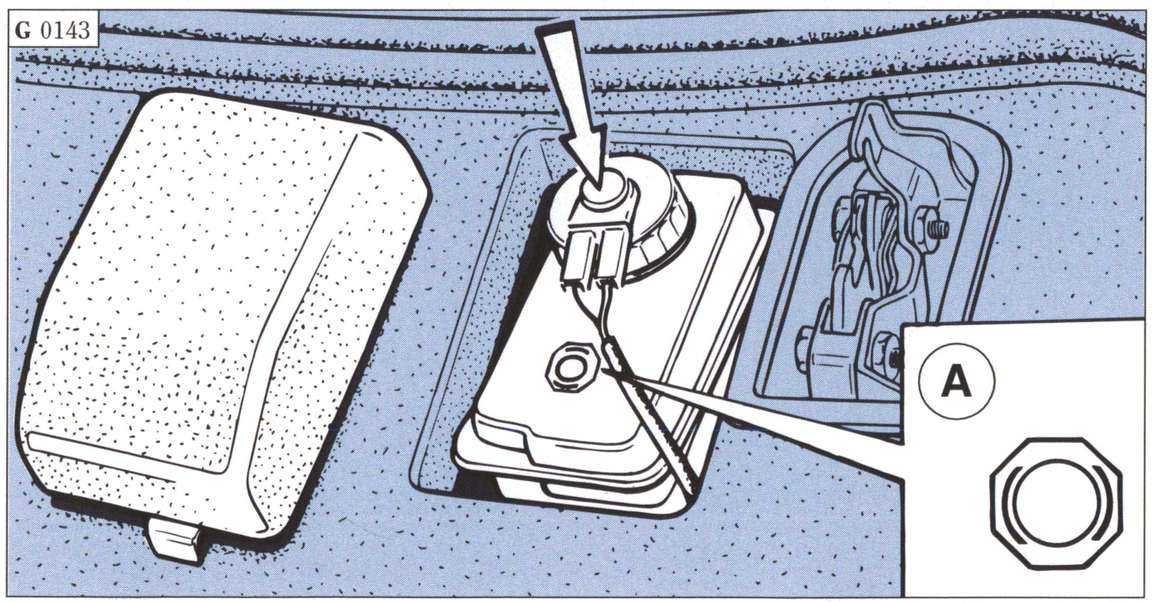

Fig. 2 - Brake fluid reservoir
A - Symbol.

Brake protection circuit

It has two warning lights (Fig. **3**):

Brake warning light

It comes on in one of the following situations:

– when the fluid level in the reservoir goes below the minimum;

– to signal an excessive wear of front brake pads.

ABS warning light

It list up in one of the following situations:

– to signal to the driver possible ABS failures. When the light is on, the anti-locking function is disabled automatically, while the standard braking system continues operating;
– during starting, for approximately 3 seconds of self-check.

The hand brake warning light (Fig. **3**, re. **3**) comes on when the hand brake is engaged.

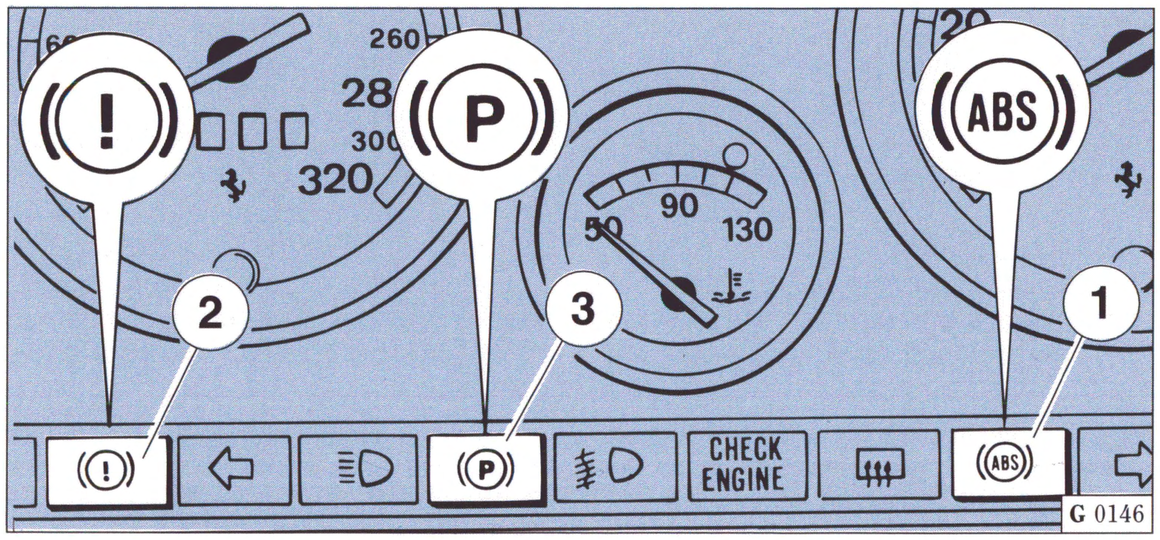

Fig. 3 - Brake warning lights

1 - ABS warning light;
2 - Brake failure warning light;
3 - Hand brake warning light.

Brake booster

The master cylinder/brake booster assembly is supplied as one single unit.

The master cylinder cannot be changed since this would alter the internal clearance values which are extremely important for the device correct and gradual operation.

Brake booster	
Type	BENDIX, vacuum type
Reservoir max. level ..... cm^3	375
Reservoir min. level ..... cm^3	275
Master cylinder	
Type	Hydraulic, in tandem
Cylinder diameter ..... mm	23.8
Front cylinder stroke ..... mm	16.4 ÷ 18.3
– displaced liquid volume ..... cm^3	≥ 6.88
Rear cylinder stroke ..... mm	16.3 ÷ 18.2
– displaced liquid volume ..... cm^3	≥ 6.65
Total stroke ..... mm	32.7 ÷ 36.5

Connection to vacuum meter

For a better efficiency of the brake booster operation, the vacuum chamber has been connected to a pump (vacuum meter)

installed on the right cylinder bank engine and driven by the camshaft (Fig. **4**).

Pump speed	*Oil temperature*	*Oil capacity*
450 1/min	**120 °C**	**300 cm³/min**

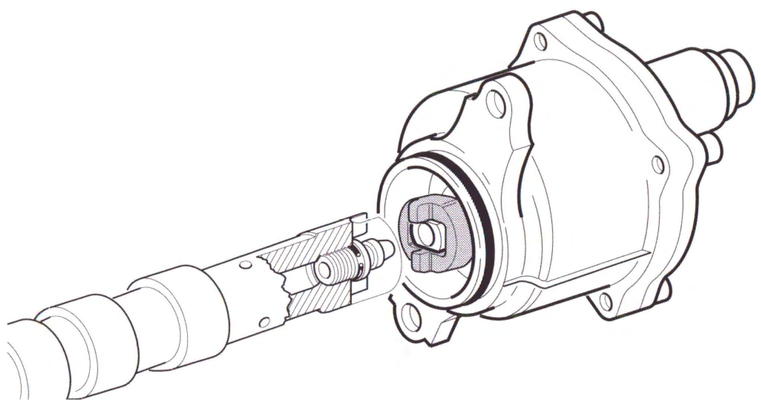

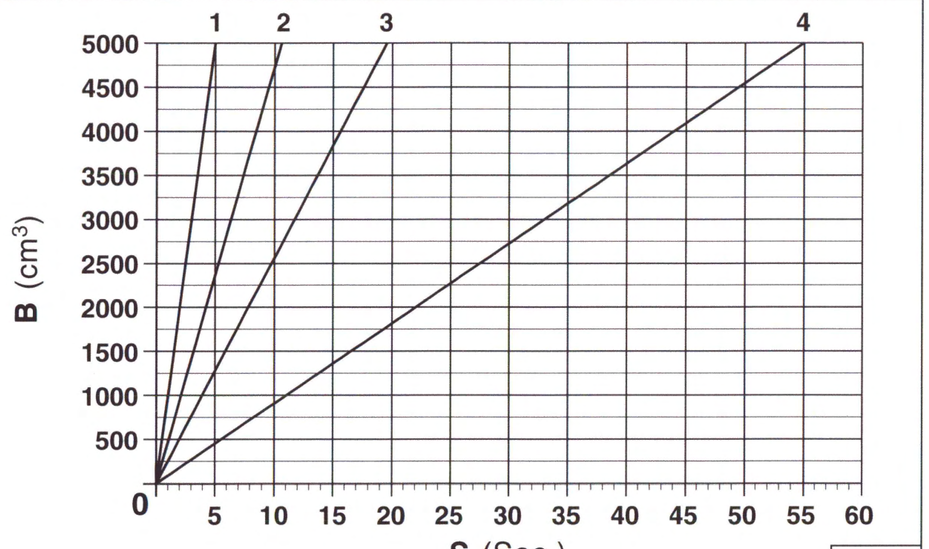

G 0149

Fig. 4 - Vacuum meter and working curve with engine at 900 rpm.
B - Booster volume; **S** - Suction time.

Note: the vacuum meter makes the same revolutions of the camshaft.

Adjustment of brake pedal free travel

For correct brake operation, the brake pedal must have a free travel of 8 to 10 mm before operating the master cylinders.

For this reason the push rod **1** (Fig. **5**), that operates the master cylinder and is located inside the brake booster, is adjusted to the correct clearance by the manufacturer.

This clearance must never be altered, consequently the brake booster master cylinder should not be removed.

If necessary, replace the whole master cylinder brake booster unit.

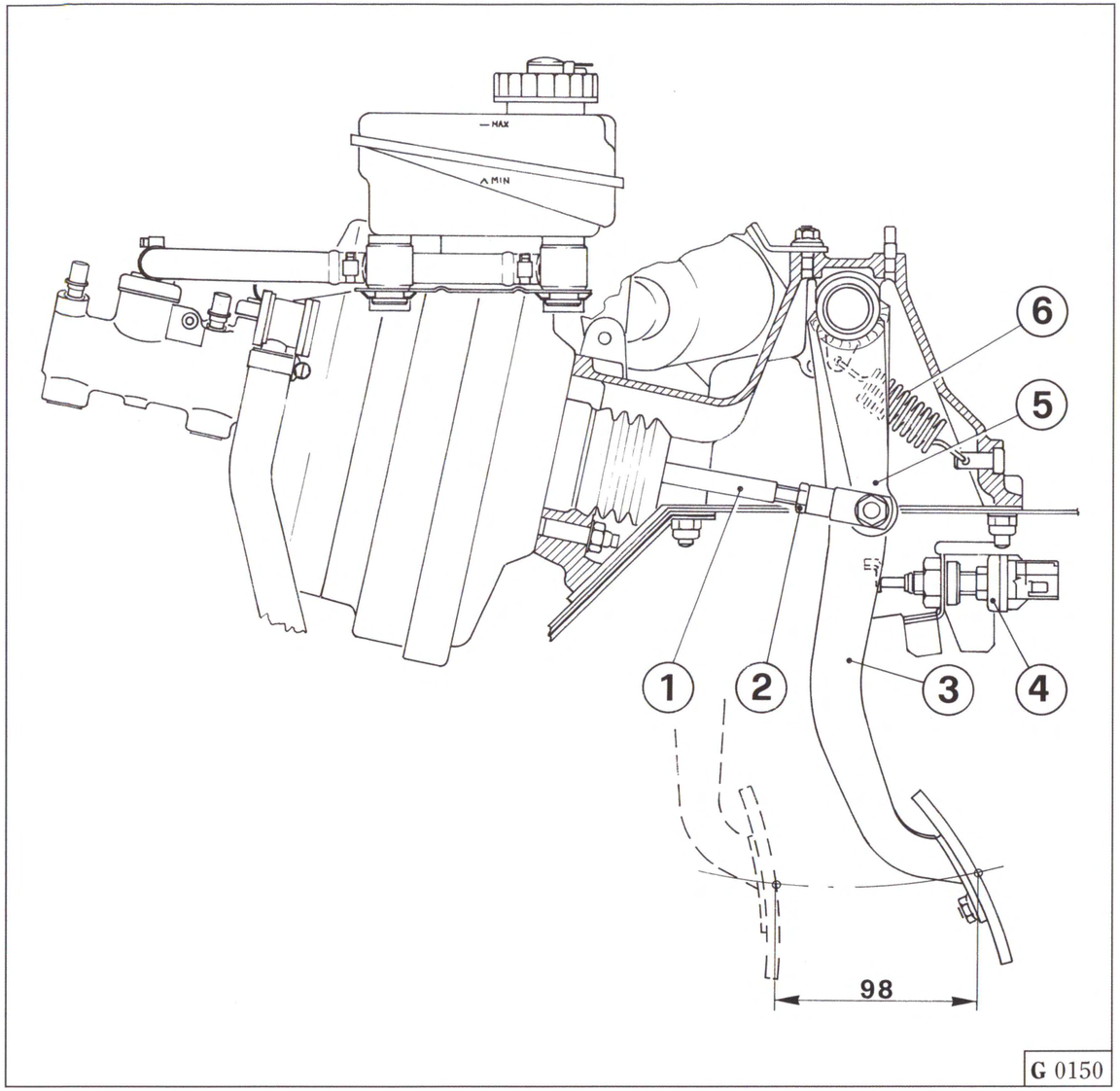

Fig. 5 - Brake pedal assembly

1 - Push rod;
2 - Nut;
3 - Brake pedal;
4 - Stop light switch;
5 - Transmission lever;
6 - Pedal return spring.

The rod **2** (Fig. **5**) connecting the brake pedal to the brake booster transmission lever must be adjusted so that the pedal is in the correct position when at rest.

Once the brake pedal is in the correct position, the stop light switch must be positioned.

The full brake pedal travel is 98 mm, measured next to the centerline of the pedal plate.

BRAKE CALIPERS

Before removing the brakes:

– Clean the caliper-disc unit with a jet of steam to remove the dust that forms with pad wear.

– Dry with compressed air.
Do not use gasoline, diesel fuel or other solvents for cleaning procedures since this would damage the seals.

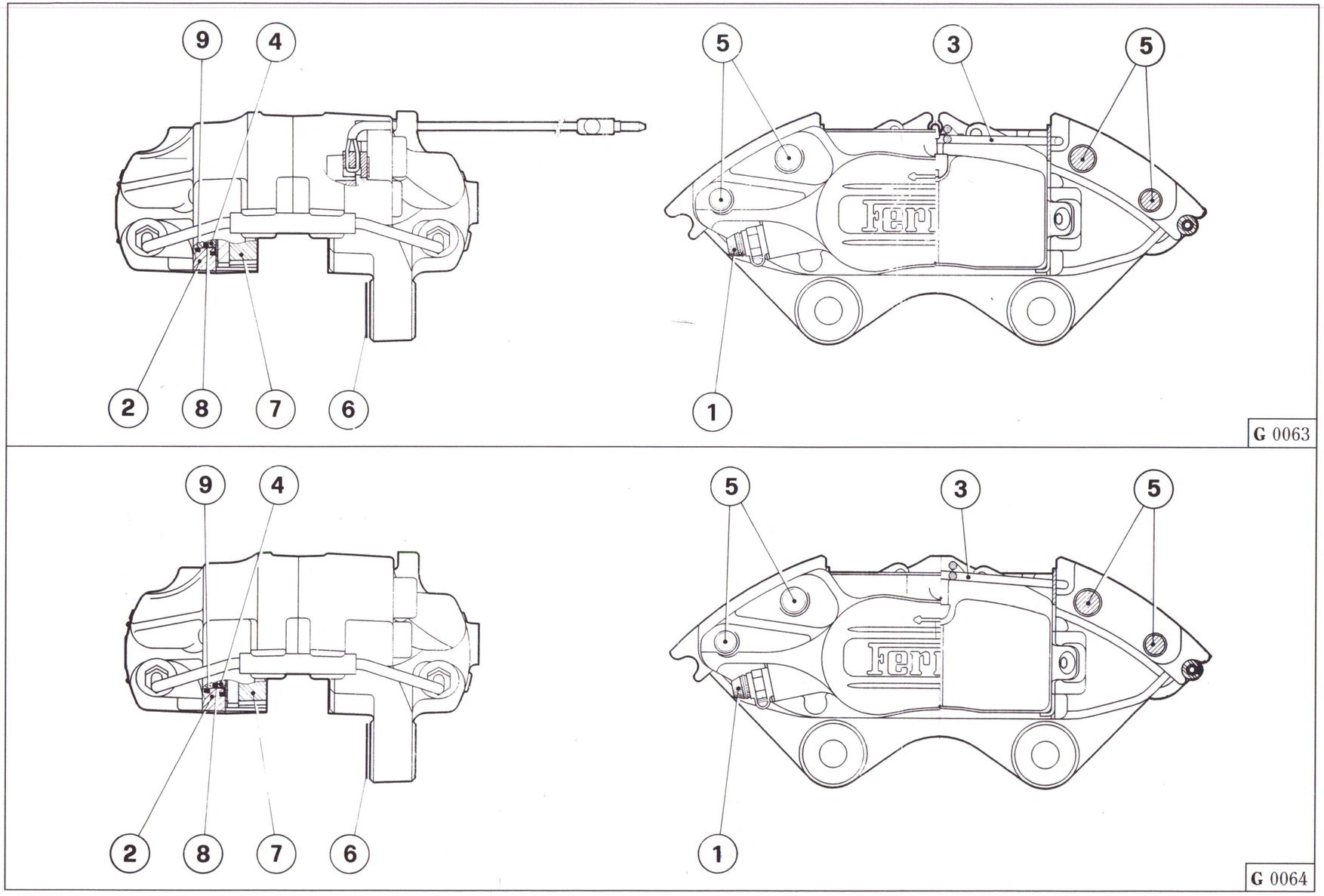

Fig. 6 - Front and rear caliper.

Fig. 7 - Rear caliper.

1 - Bleed valve; **2** - Cylinder outer housing; **3** - Spring; **4** - Cylinder; **5** - Locking screw; **6** - Caliper centering shim; **7** - Pad; **8** - Dust seal ring; **9** - Inner seal ring.

BRAKE PADS REMOVAL AND REPLACEMENT

While fitting the new pads, do not use pliers, screw-drivers and metallic tools as the insulating rings could be damaged.

Brake pads

Front brake pads are equipped with a wear indicator connected to the brake failure warning light; when this warning light comes on or when the braking proves irregular, have the pad thickness and the braking surface conditions checked.

The minimum allowed thickness of brake pads is 3 mm - (friction material thickness).

Use only **GALFER 3320 FF** pads for front and rear brakes.

To replace the pads, proceed as follows (Fig. **8**):

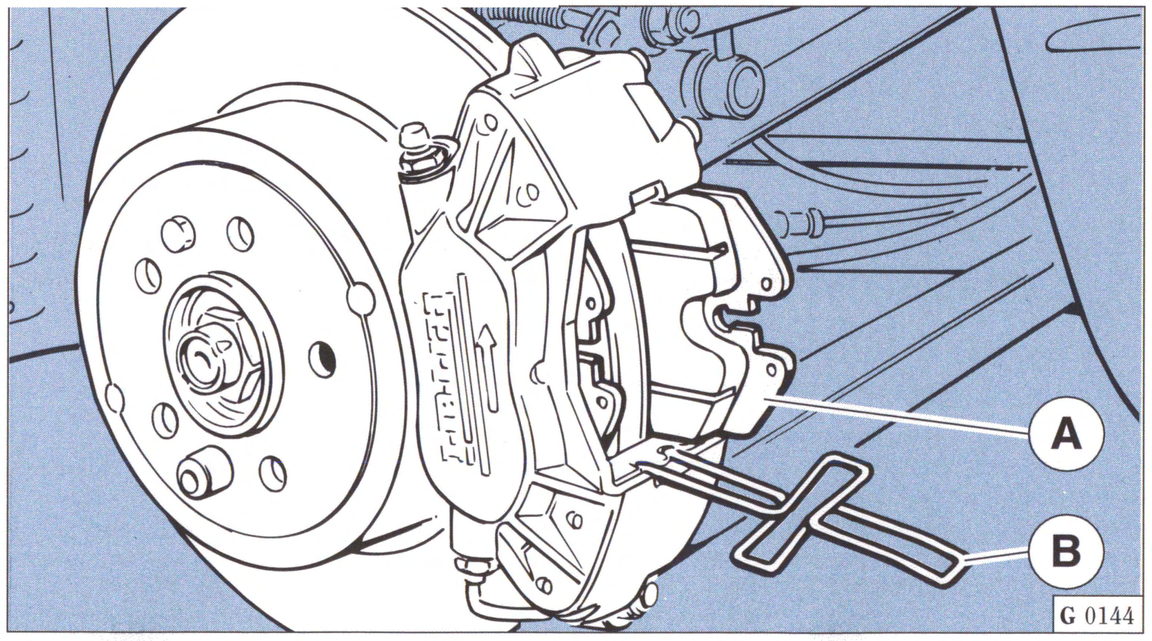

Fig. 8 - Brake pad replacement
A - Pad; **B** - Retaining clamp.

– remove, through the suitable pliers, the retaining clamps **B**;
– remove the pads and push the corresponding pistons;
– fit the new pads and the clamps **B**.

Avoid sudden braking until the new pads are well settled (about 300 km - 185 miles).

Both for front and rear calipers, during pad removal, carry out the following checks:
– check disc surface and thickness; possibly grind it complying with the tolerance and roughness values on the table of page **G3**.

– In case of pad uneven wear, check the piston sliding and the centering of the caliper with respect to the disc, using a thickness gauge (Fig. **9**).

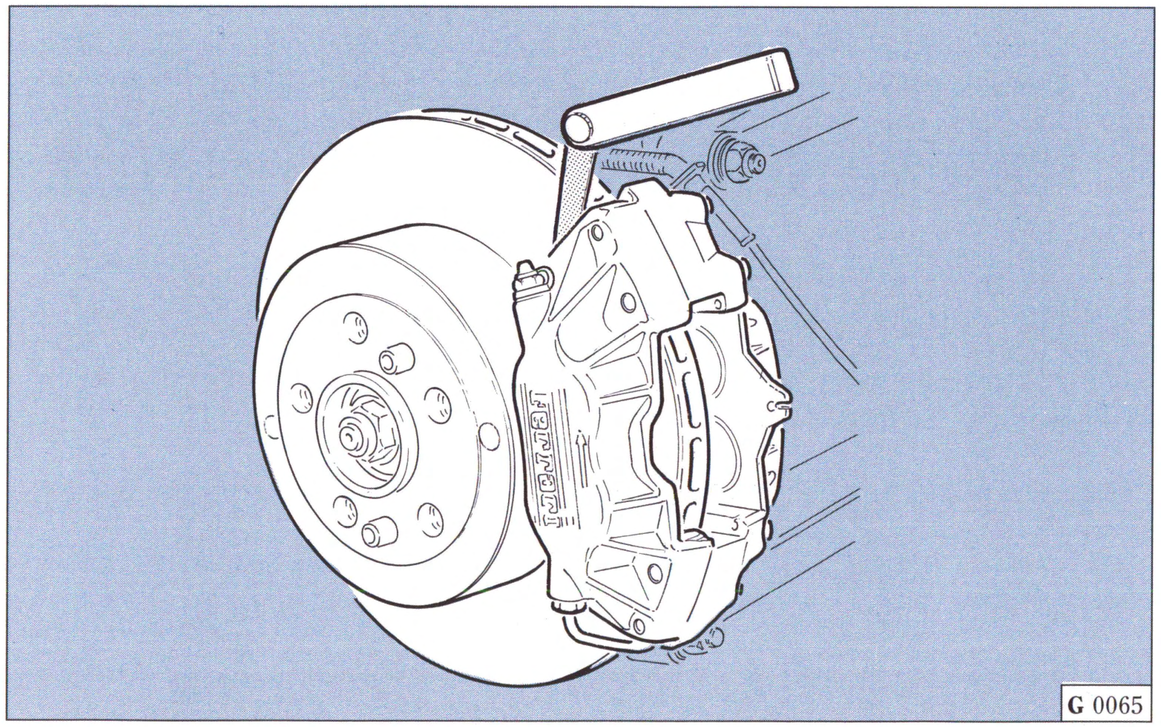

Fig. 9 - Caliper centering measurement.

– If necessary center it by altering the number or thickness of washers **6** (Fig. **6** - **7**).
– Maximum permissible tolerance in caliper centering is 0.3 mm.

– Install the pad retaining clamp once again.
– Approach the pads to the discs by pressing the brake pedal several times.

– Check that the clearance between pads and disc is about 0.1 mm.

SYSTEM BLEEDING

The bleeding must be carried out through the fittings placed on the brake calipers, like on a standard system, and through the SD-1 Ferrari Tester (to open the solenoid valves), selecting in the “Diagnosis” page the “Bleeding” operation.

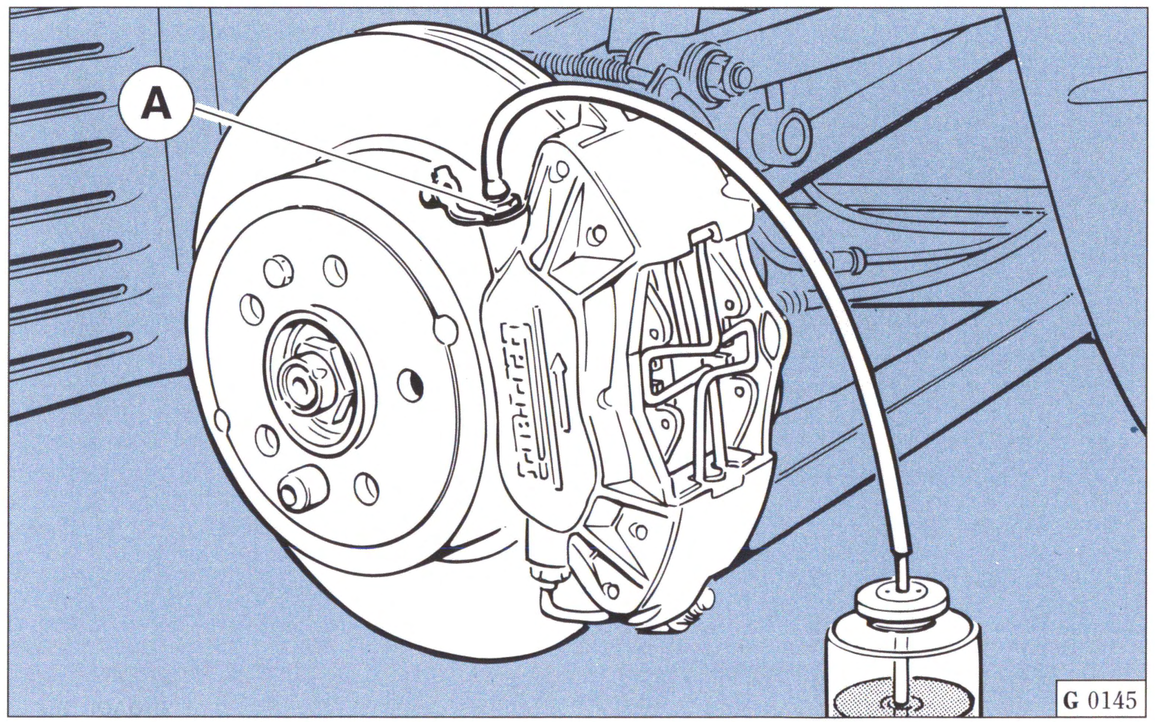

Fig. 10 - Brake bleeding
A - Bleed screws.

– Fill the reservoir. During bleeding operations the fluid level must not fall below one quarter of the maximum level.

– Always use fresh fluid (page **A6**) contained in sealed tins.

– Start bleeding from the front brakes.

– Bleed both caliper sides through screws **A** (Fig. **10**).
– Upon completion of the bleeding operation, the brake pedal should not be spongy and the braking action should be progressive after the short free travel of the pedal.
– Settle the pads by testing on the road without overheating.

For a correct brake pad settling, avoid sudden braking until the new pads aren't well settled (about 187 miles - 300 km).

– After running in, it is good pratice to disassemble the pads to scrape away any traces of metallic deposits retained by the braking surfaces.

HAND BRAKE ADJUSTMENT

If the hand brake lever stroke is excessive, this may be due to the wear of the braking shoe seals or to a cable loosening.

To adjust the brake:

– first of all restore the correct clearance between shoes and drum, operating on the toothed sleeve to lock the disc through the hole on the brake disc itself.

– Turn the sleeve **1** in the opposite direction until the disc rotates freely.

– Operate within the first 3 - 4 notches of the hand brake lever, so that the rear wheels can lock.

– If necessary, adjust the lock nuts**A** of the control cable (Fig. **11**).

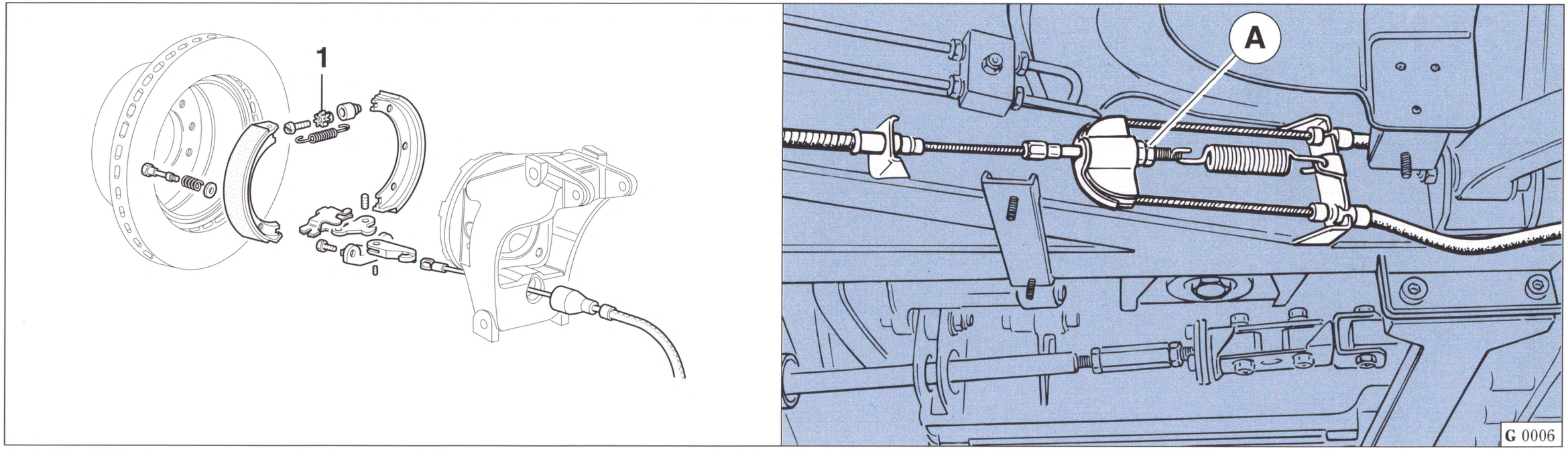

Fig. 11 - Hand brake control.

ABS SYSTEM

General features

The braking system is controlled by the BOSCH 5.3 ABS System (Anti Blockier System - Wheel Anti-locking System).

The system is integrated in an individual electrohydraulic control unit.

Note: the system cannot be disconnected.

ABS system

The ABS system improves driving safety in emergency situations, e.g. when an unskilled or panic-stricken driver brings the car to its skid limit, temporarily losing the control of the car.

While running straight on, in fact, if you brake so suddenly as to cause wheel locking, the car may tend to turn around its vertical axis. This is due to the unavoidable disturbing actions resulting from the different friction coefficients of the four wheels. By releasing the brake pedal the car goes on keeping the unsteered front wheels in the direction of its longitudinal axis (Fig. **12**).

Likewise, if you steer keeping the front wheels locked, the car goes straight on, and as soon as the brake pedal is released the car steers and delineates a curve.

The passage from one condition to the other takes place very suddenly (Fig. **13**).

If during a curve you brake slightly, the car may tend to oversteer moving towards the center of the curve.

If, by braking, you cause wheel locking, the car may run in the tangential direction (Fig. **14**).

Fig. - Abb. 12

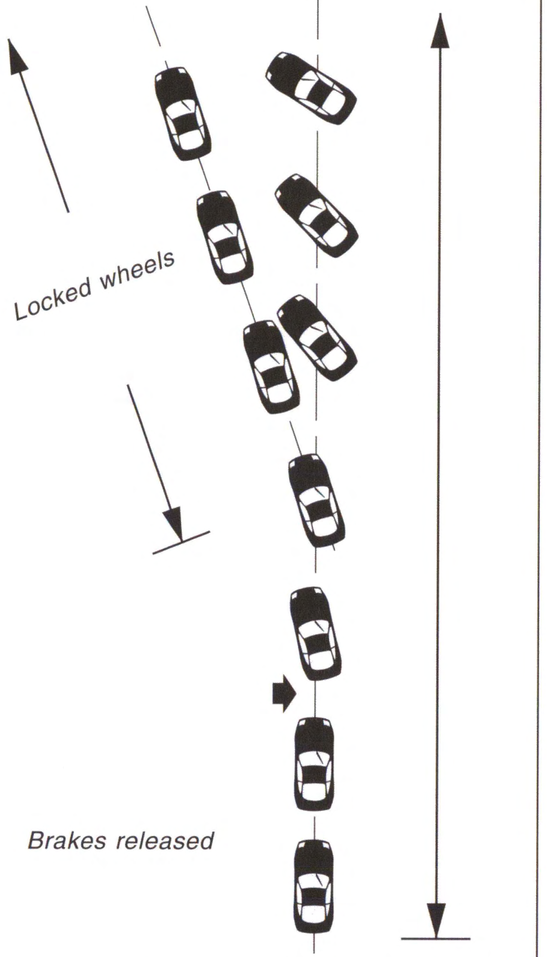

G 0121

Fig. - Abb. 13

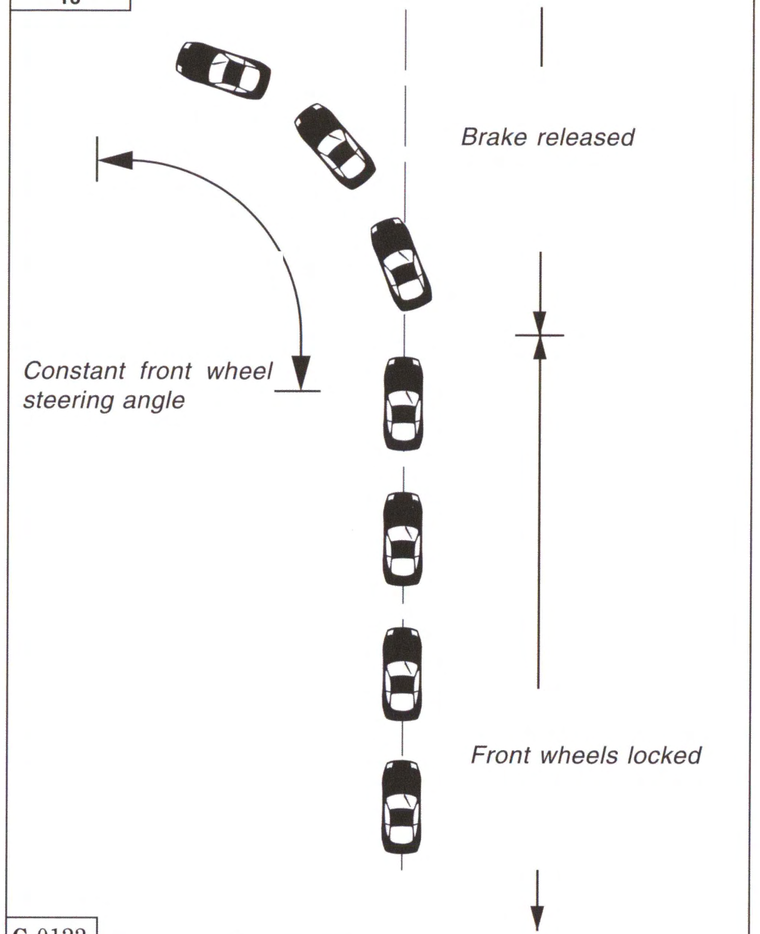

G 0122

Fig. - Abb. 14

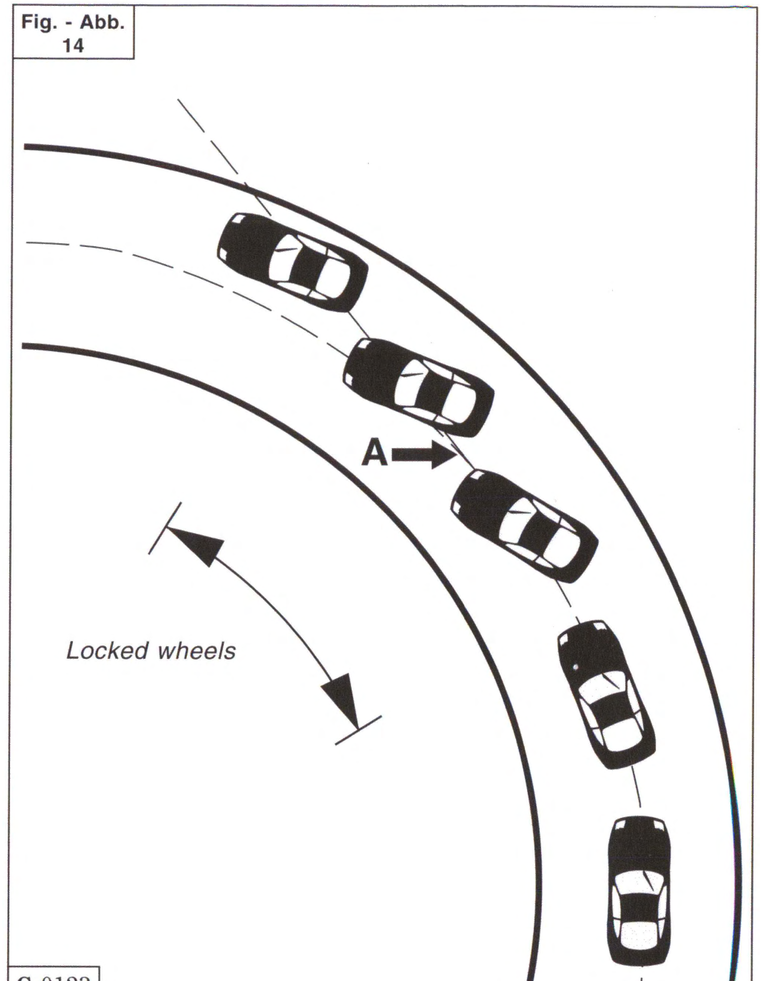

G 0123

Fig. 12 - Hard braking without steering.
Fig. 13 - Hard braking with steering.
Fig. 14 - Hard braking while taking a curve.

If you brake by locked wheels, the coefficient of road-tyre friction drops drastically and the braking distances lengthen considerably.

An electronic anti-skid system allows the following advantages to be obtained:

1 - Running stability (no skidding) even by sudden braking causing wheel locking.

2 - Steering capacity (no side skidding in case of sudden deviations). This means that even by emergency braking the driver can avoid an obstacle as well as brake while taking a curve, without impairing the car stability.

These performances of the ABS system are effective unless the tyre side traction limit speed, beyond which the car skidding cannot be avoided, is exceeded.

3 - Optimum braking distance: a running wheel can transmit a greater friction than a locked wheel. Depending on the road-bed, the reduction of the braking distance can be up to 40%.

The ABS system does not relieve the driver of the need to drive carefully.

It cannot compensate for the driver exceeding speed limits due to the traffic or road conditions, worn tyres, worn brake components or driving errors.

The ABS is thus only aimed to help the driver in the braking modulation within limiting conditions, in which he might cause the wheels to lock.

THEORY

Definition of skidding

While braking, accelerating or changing the running direction, friction forces are transmitted between tyre and road-bed. For instance, when you brake you exert a braking action opposed to the wheel rotation, which makes the wheel turn at a lower speed than the corresponding running

speed of the car.

Thus the tyre loses its shape and this event causes the skidding between tyre and road-bed.

We can express the skidding (λ) through this mathematical formula:

λ =skidding expressed in percentage,

Vf = running speed

Vr = peripheral wheel speed.

The formula shows that when:

Vr = **Vf** the skidding is zero, i.e. the rotation speed of the wheel corresponds to the running speed of the car;

Vr = **0** the skidding is 100, i.e. the wheel is locked.

$$\lambda = \frac{Vf - Vr}{Vf} \times 100$$

The car speed **Vf** is obtained from the speed of two diagonally opposed wheels.

So there are two reference values for the speed with two separated integrated circuits comparing each other.

The speed reference value is essentially the maximum speed value of the diagonally opposed wheels and the logic uses it as if it were the running speed.

By comparing the wheel speed and the running speed, the system determines the wheel acceleration and deceleration, then from the comparison of these values with the threshold values stored in the ECU the logic decides when the adjustment has to intervene.

Braking force-skidding diagram (Fig. 15)

We can try to make a diagram showing the braking force depending on the skidding for a definite value of the friction coefficient, i.e. for a definite coupling between tyre and road-bed.

– This diagram shows that when $\lambda = 0$ (wheel running at the speed corresponding to the running speed of the car), the braking force is zero.

– When $\lambda = 100$ (locked wheel) the braking force takes on a rather high value.

The highest point of the curve, i.e. the point where the maximum braking force is transmitted, corresponds to a skid value of approx. 10 ÷ 30%.

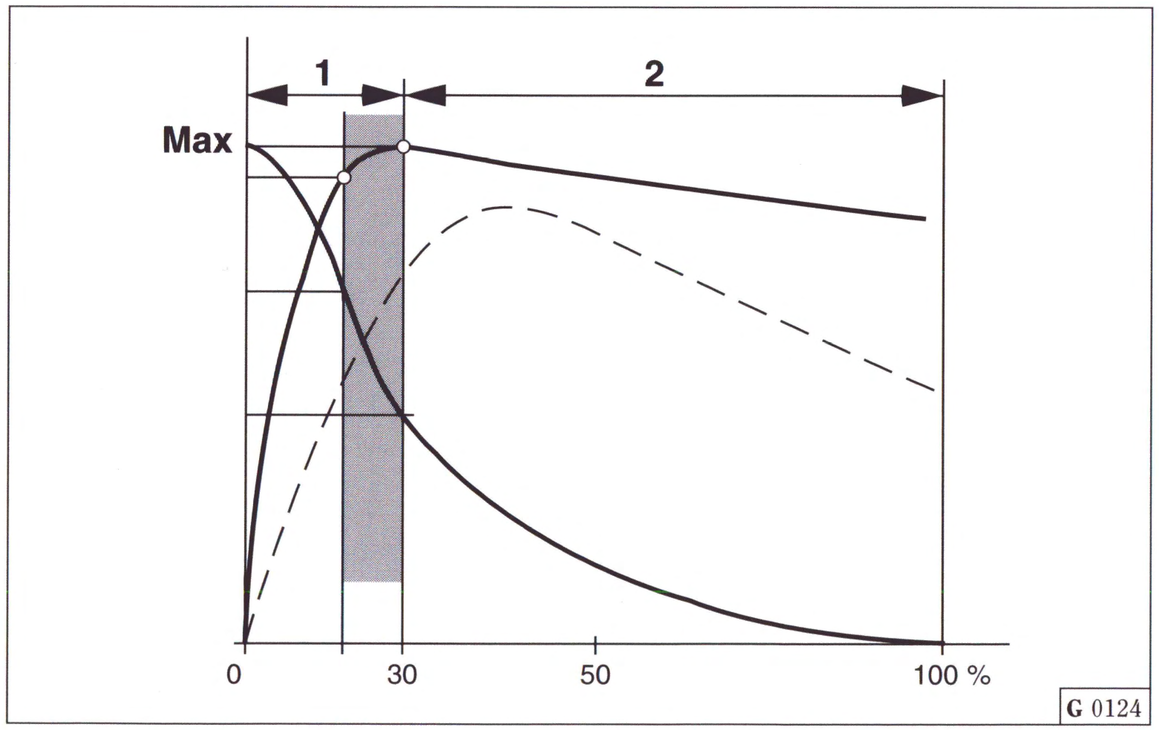

Fig. 15

1 - Braking force-skidding;
2 - Side force-skidding.

With the skidding values preceding this value the braking keeps safe, but with the values following the braking becomes unstable.

Therefore the ABS has to adjust the braking so as to keep the braking force within the stability range.

Diagram of braking force - skidding depending on the road-bed

The diagram shows different trends of the braking force depending on the different friction coefficients.

According to the different conditions of the road-bed, the maximum value of the braking force is obtained when the skidding values are included between 10 ÷ 50%.

Thus, if a braking adjuster must always give the optimum braking distance, it cannot work at a fixed skidding value, but it has to adjust the braking pressure in order

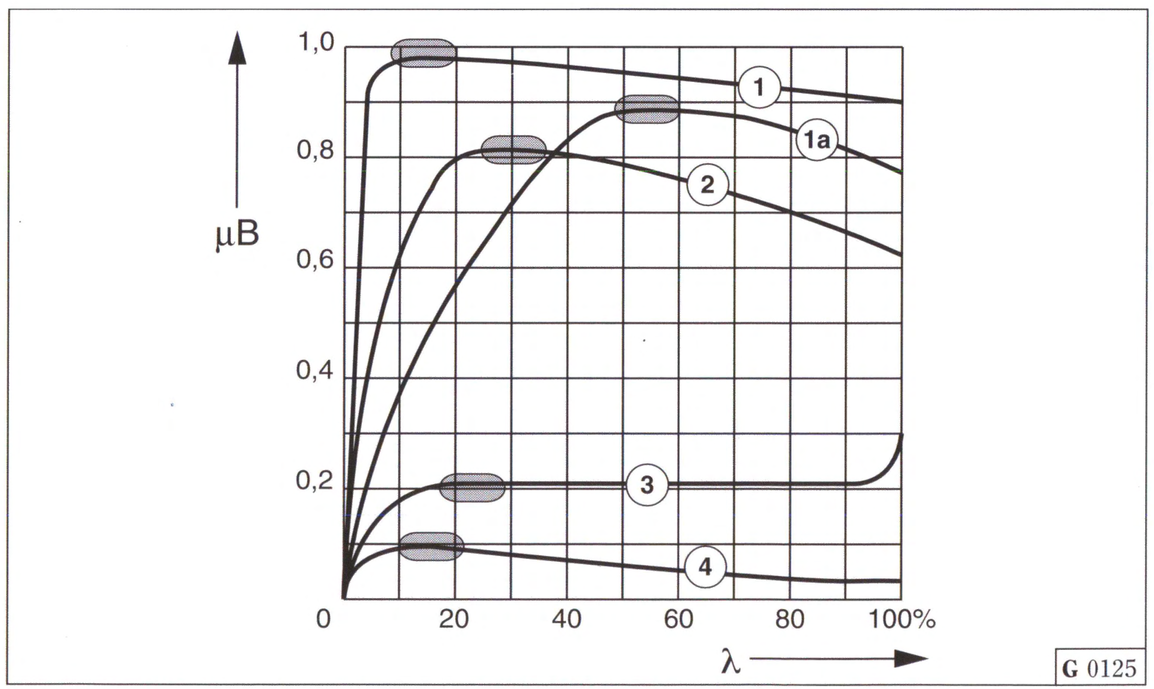

Fig. 16 - Braking force - skidding vs. road surface

1 - Dry asphalt;
1a - Dry asphalt and 10° steering angle;
2 - Dry asphalt and snow tyres;
3 - Road-bed covered by soft snow or sand;
4 - Frozen road-bed.

to reach the highest point of the corresponding braking force-skidding curve under different circumstances.

Therefore, the ABS electronic logic operates both on the speed as absolute value and on acceleration and deceleration comparing them with the threshold values.

Just in case of soft snow and with locked wheels you can obtain a greater braking performance thanks to the snow wedge which forms in front of the wheel. However, the peculiar advantage of ABS is the running stability and, above all, the possibility to change direction.

Operation

The anti-skid system consists of:
- ECU (integrated in the hydraulic control unit);
- hydraulic control unit with pump and 6 solenoid valves (4 for front wheels and 2 for rear wheels);
- 4 speed sensors on the wheels;

- harness.

All this is added to the normal braking system of the car, without changing its basic features.

The anti-skid system starts working when the speed exceeds 12 km/h (4.5 mph) and it is cut out when the speed is lower than 6 km/h (2 mph).

The reference value is the wheel speed recorded by the sensors.

When a wheel is nearly locked, the hydraulic control unit operates on the braking circuit through a 3-step cycle:

– Increase stop and pressure holding.

– Pressure reduction.
– Pressure increase in the hydraulic circuit.

These adjustment steps occur cyclically by braking through ABS operating until the car stops or until the force exerted on the pedal decreases.

A pump integrated in the hydraulic control unit sends the oil back to the circuit (see Fig. **20**) during the pressure reduction step.

The adjustment occurs separately on the front wheels, while rear wheels are simultaneously adjusted according to the SELECT LOW system (the wheel with the lowest friction determines the required adjustment, that is the first of the rear wheels that starts locking makes the ABS operate on the other wheel as well).

Through this adjustment on the rear axle, its stability during braking is ensured.

PARTS

Braking corrector

The pipe feeding the rear brake calipers contains a braking corrector (**15**, Fig. **1**), performing the following functions:

– it avoids the ABS system operation on rear brakes in case of medium deceleration.
– It ensures a balanced braking (like a standard braking system) in case of ABS system failure.

The braking corrector operates when the inlet pressure (**Pi**, Fig. **17**) reaches 20 bar and limits the outlet pressure increases

(**Pu**) to 36% of the inlet pressure increases.

The resulting **Pu** pressure is shown on the inlet diagramme (Fig. **17**).

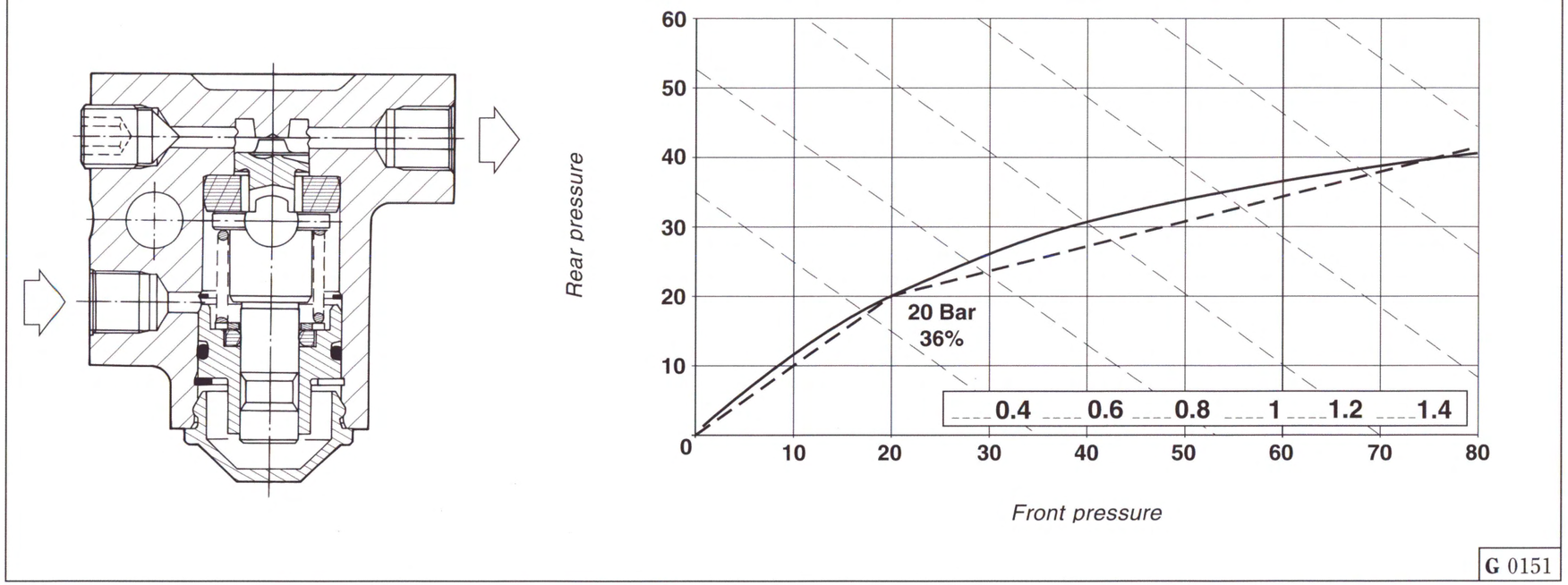

Fig. 17 - Braking corrector and diagramme.

Speed sensors

They consist of a magnetic core and a coil.

The core tip is surrounded by a magnetic field.

When the toothed wheel turns, the teeth cross the magnetic field and induce a voltage into the coil.

The frequency of the pulses generated by the various teeth is proportional to the number of the wheel revolutions, so it is the signal of the wheel speed.

– The speed sensors of the front wheels are axial sensors and receive the signal from a toothed crown fixed on the hub (Fig. **18**).

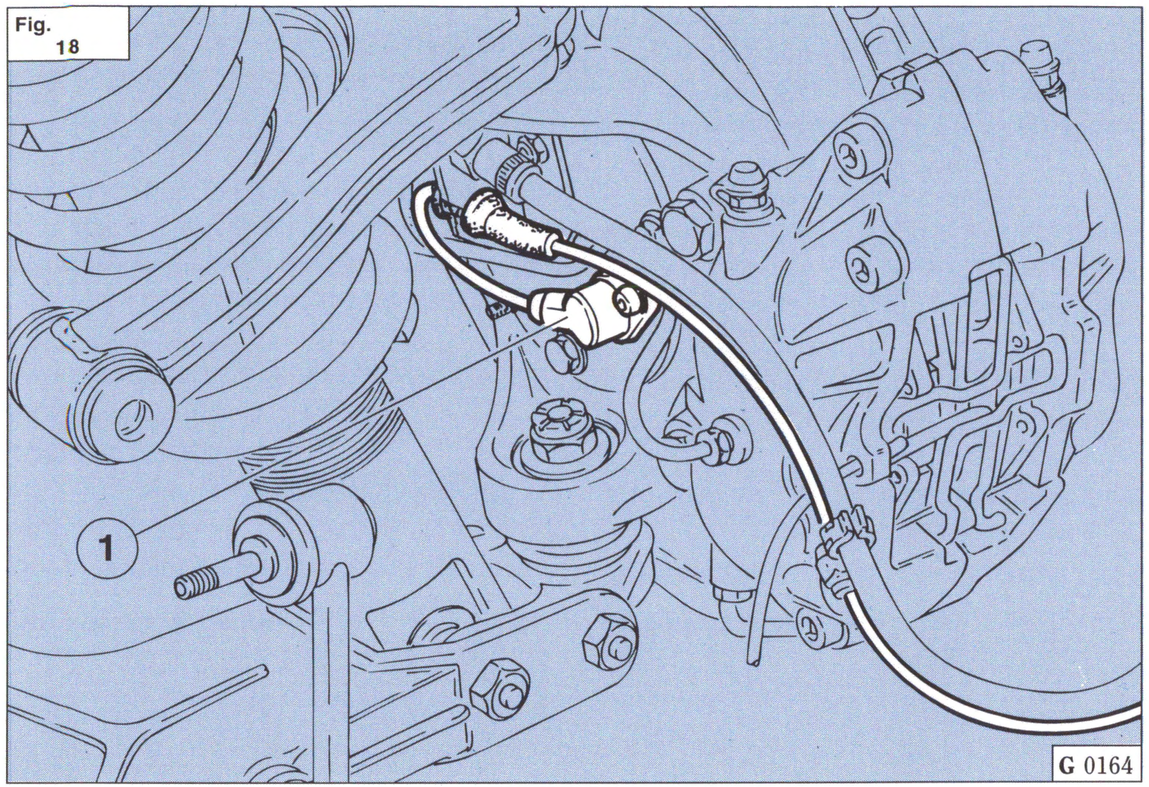

Fig. 18 - Front hub.

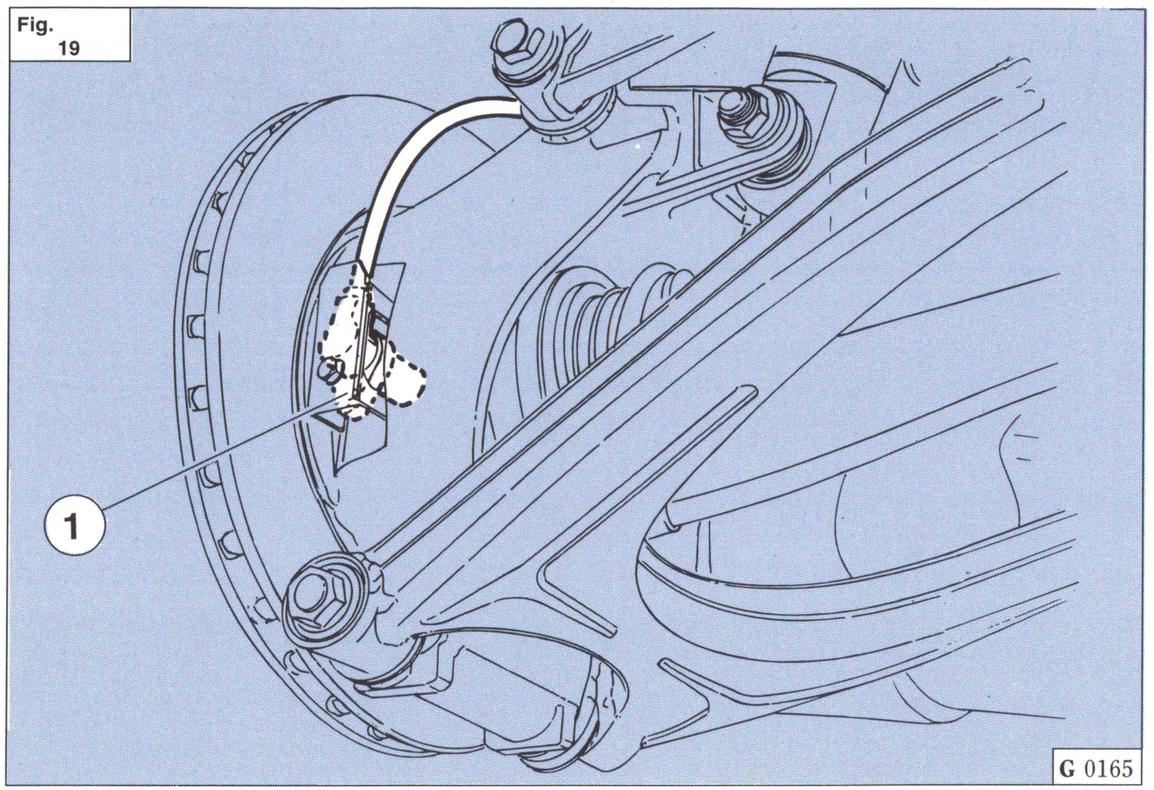

Fig. 19 - Rear hub.

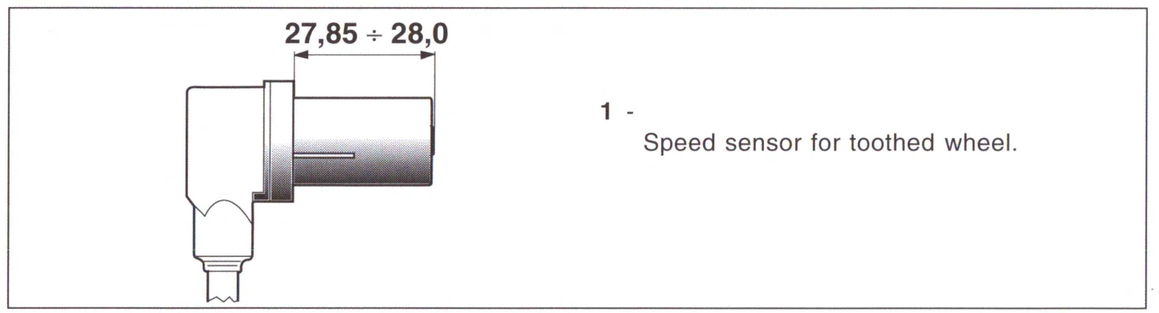

– The sensors for the rear wheels are fixed on the hub- support and receive the signal from a toothed wheel installed on the spacer sleeve of the wheel bearings (Fig. **19**).

ECU safety circuit

The safety circuit controls:

A - Presence of the sensor signal.

B - Presence of the signal which controls the pump operation.

C - Presence of the control signal for the solenoid valves.

D - Duration of the solenoid valve control.

E - Battery voltage.

In case of bad functioning the ABS warning lamp lights up and the system is cut out.

The braking system works as usual.

In addition to the checking function, the safety circuit also has a self-diagnosis function.

BITE

When the speed of the 4 wheels exceeds 6 km/h (2 mph), and the key is in position **"II"**, i.e. the voltage coming from the sensors exceeds the fixed threshold value, the test cycle begins.

During this cycle the control unit transmits test signals to the various components, then it checks if certain output signals correspond to these signals.

Should an error be found out, the error memory is activated, the warning lamp of the dashboards lights up and the ABS is cut out.

The braking system works as usual.

CAUTION

– During welding operations you have to disconnect the plug of the electronic control unit.

– Keep the electronic control unit far from temperatures exceeding 85°C [185°F] (e.g. painting furnace).

– If the battery is removed, check the clamping of the terminals after the battery has been fit again.

Hydraulic assembly and electronic control unit

The hydraulic assembly, with electronic control unit (Fig. **20**) is located in the front left part of the front compartment.

It is formed by a hydraulic ECU, integrating the pump and solenoid valve control relays.

When it works, it adjusts the hydraulic pressure delivered to the calipers, but it cannot increase the pressure in relation to that generated by the brake master cylinder through the pedal and the ABS system brake booster; thus the maximum pressure is determined only by the force applied to the pedal.

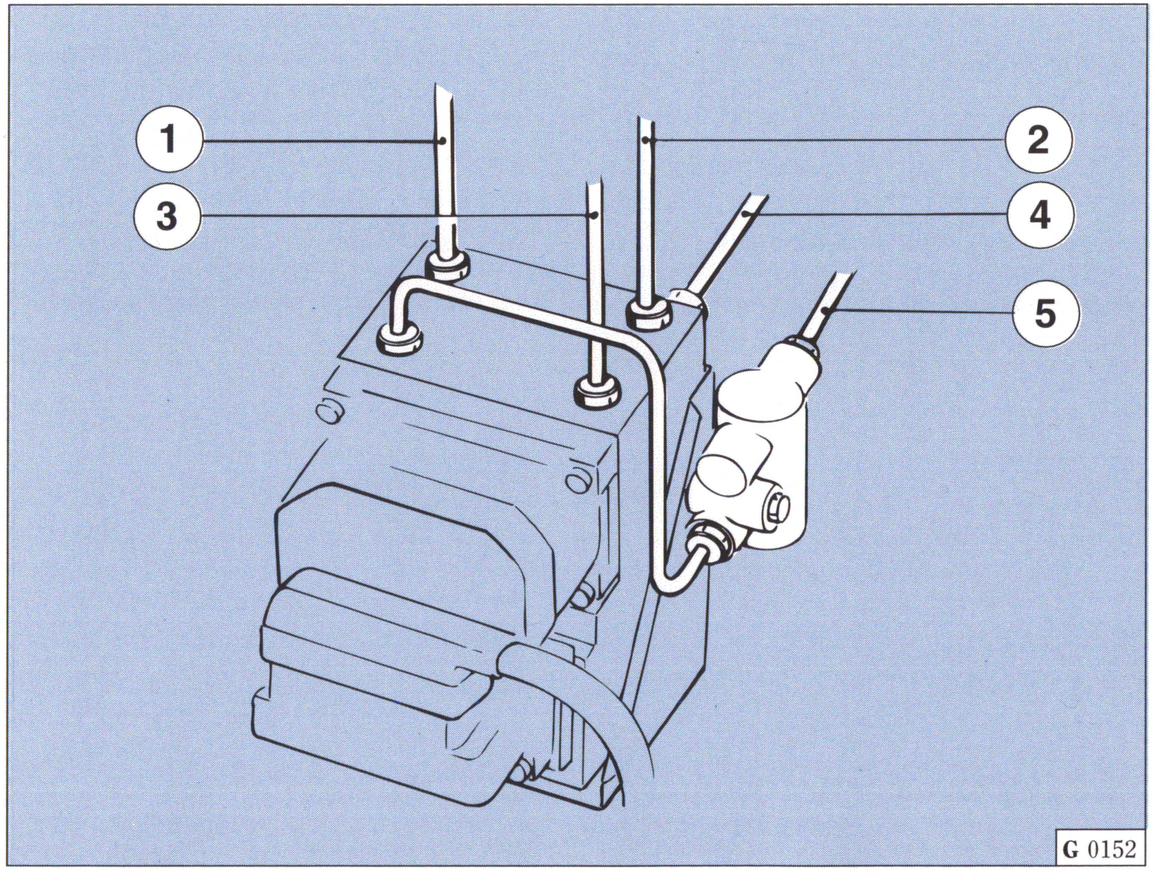

Fig. 20 - Hydraulic assembly

1 - To the master cylinder front circuit;
2 - To the master cylinder rear circuit;
3 - Left front circuit;
4 - Right front circuit;
5 - Rear circuit.

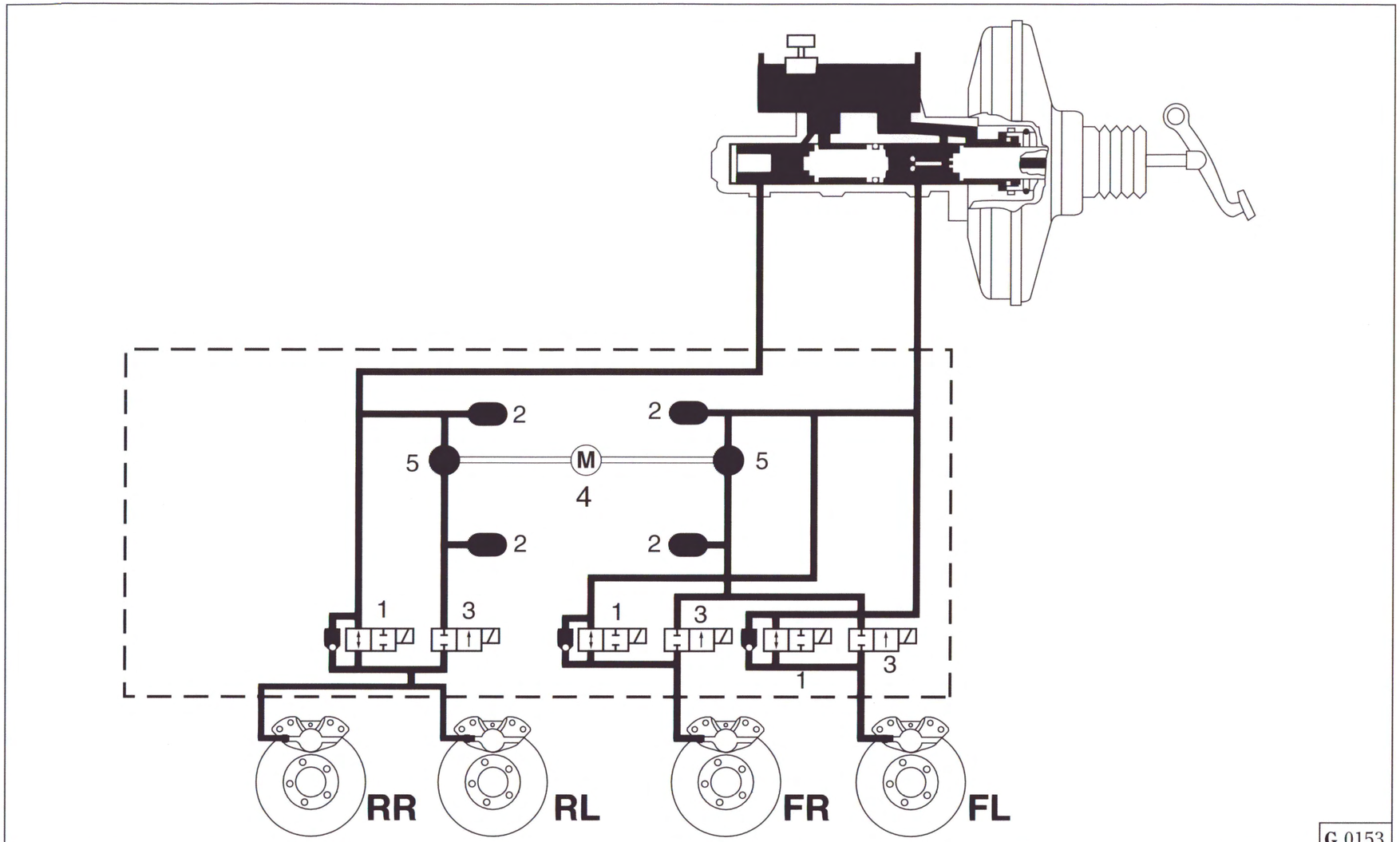

Fig. 21 - ABS hydraulic system

1 - Delivery valve (pressure generation and holding); **2** - Damping chamber; **3** - Exhaust valve (pressure decrease); **4** - Motor; **5** - Return pump.

ADJUSTMENT STEPS

Pressure generation (Fig. 22)

When the electromagnetic valve is not energized (0 current - Fig. **25** - **1**), there is a direct connection between the master cylinder pump and the calipers through the so-called primary circuit.

The brake circuits can be bled as usual (Fig. **22**).

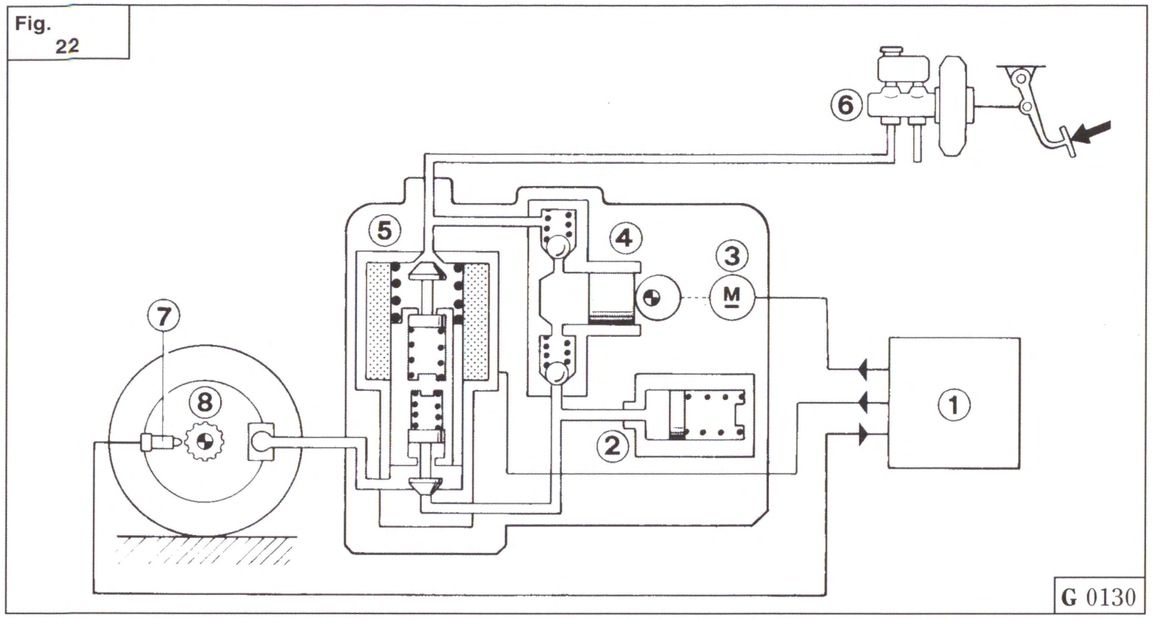

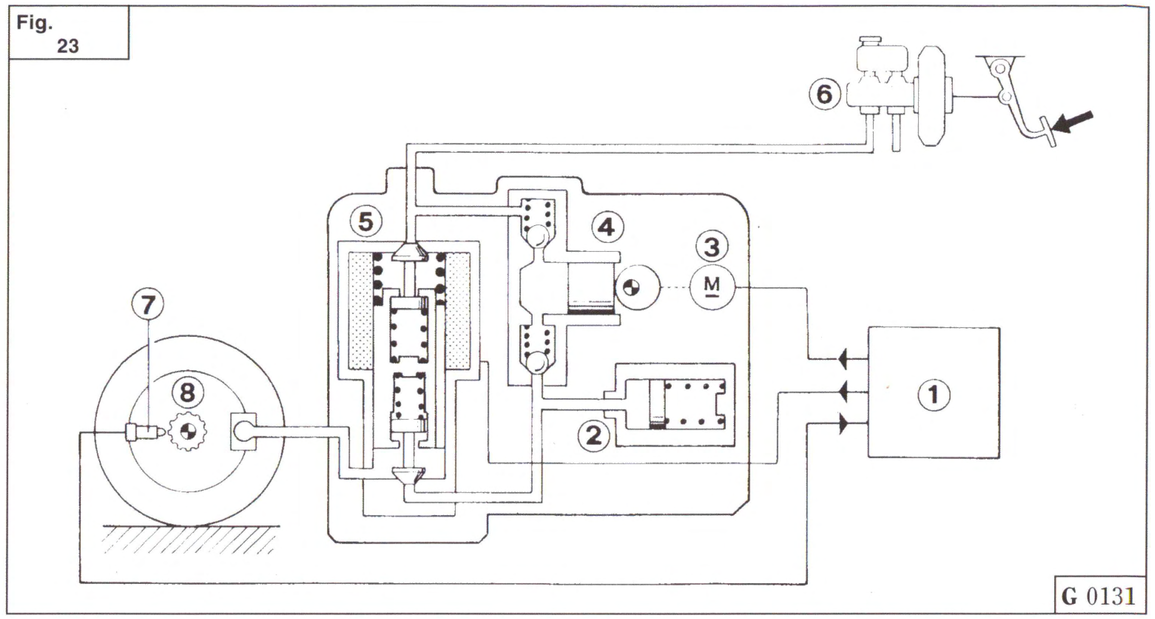

Fig. 22 - Pressure generation step.

Fig. 23 - Pressure increase and holding stop

1 - Electronic control unit; **2** - Accumulator; **3** - Hydraulic assembly; **4** - Electric pump; **5** - Solenoid valve; **6** - Brake pump; **7** - Wheel speed sensor; **8** - Toothed wheel.

Pressure increase and holding stop (Fig. 23)

When the signal for locking start of one wheel arrives, the electromagnetic valve is driven by a **2 A** current (Fig. **25** - re. **2**); thus, the main circuit is interrupted.

The pressure in the caliper keeps constant (Fig. **23**).

Pressure reduction (Fig. 24)

When the signal indicating that a wheel is going to lock arrives, the electromagnetic valve is energized by a **5 A** current (Fig. **25** - **3**).

So the main circuit is cut out, the return electric pump intake opens, some fluid is taken away from the calipers and the pres-

sure decreases.

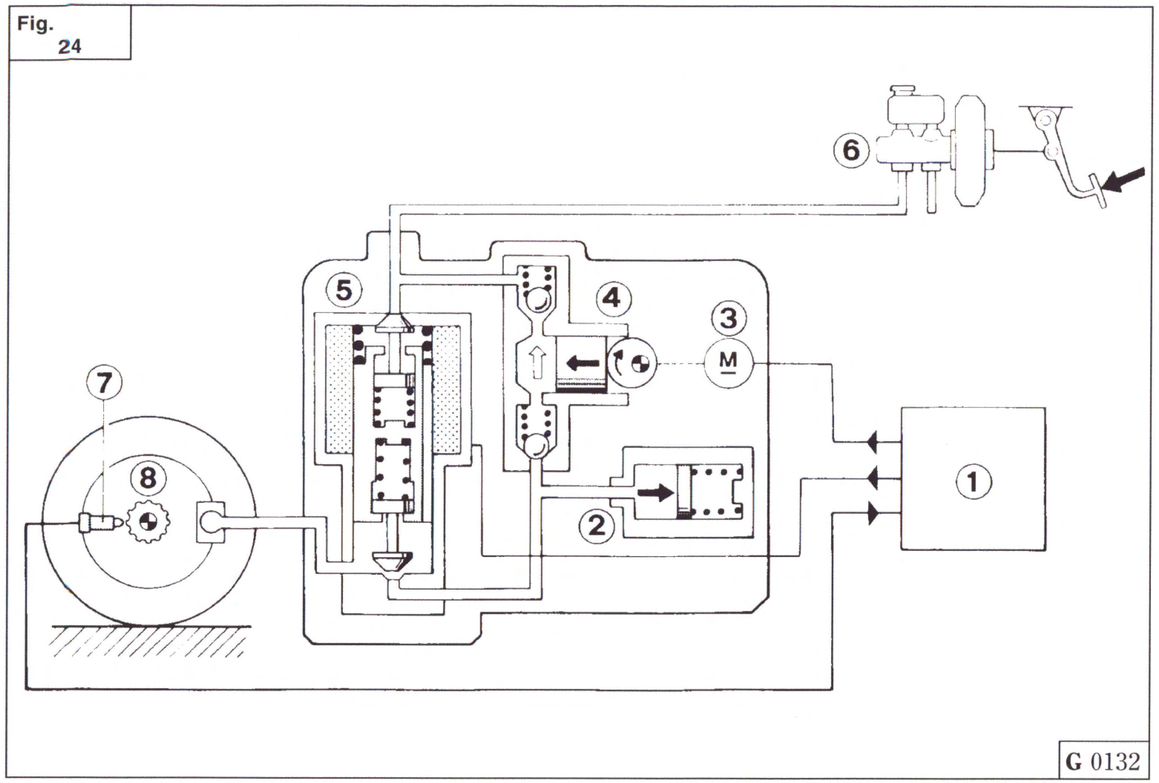

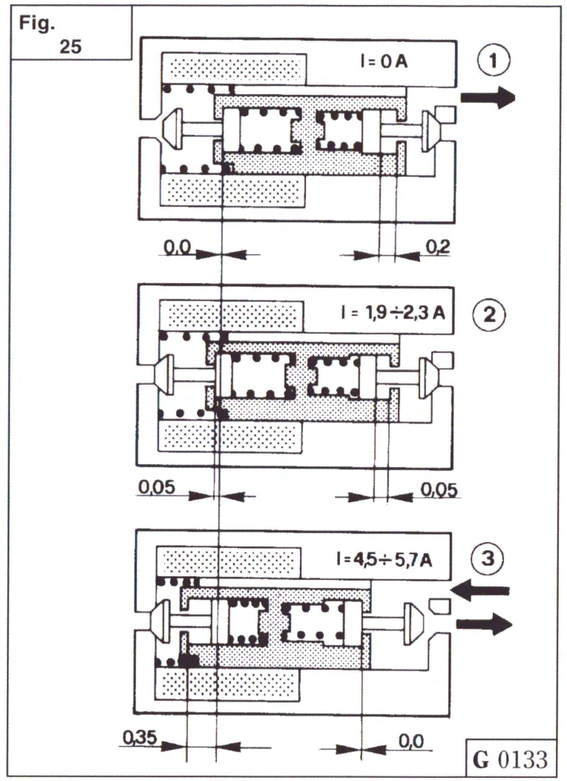

Fig. 24 - Pressure decrease.

Fig. 25 - Solenoid valve

1 - Pressure generation step;
2 - Pressure holding;
3 - Pressure reduction.

In the secondary return circuit there is a small accumulator with the function of reducing the pressure peaks generated by the pump (Fig. **24**).

ABS ADJUSTMENT CYCLE

Fig. **26** shows the simplest case of ABS intervention with peripheral wheel deceleration as single adjustment unit by straight braking on level roads with medium or high braking force values.

Within limit situations, such as braking while taking a curve with high values of transversal acceleration or braking with engaged engine with changes of the braking force, even skidding is used as adjustment unit.

While braking, the braking force in the wheel brake cylinder and the peripheral deceleration of the wheels increase.

At the end of step 1, the peripheral deceleration exceeds the set limit (-a).

Consequently, the relevant electromagnetic valve shifts to “pressure holding” position.

The braking pressure should not be decreased, as the limit (-a) could be exceeded already in the stable range of the curve of the braking force-skidding coefficient, thus determining a loss in the braking area.

Simultaneously, the reference speed with respect to a pre-set ramp decreases.

The value for the skidding limit λ_1 is deduced from the reference speed.

At the end of step 2, the wheel speed goes under the limit λ_1.

Consequently, the electromagnetic valve shifts in the “pressure reduction” position, thus the braking pressure lowers until the wheel peripheral deceleration exceeds the limit (-a).

At the end of the step 3, the value is again lower than the limit (-a) and a pressure holding step starts, with a pre-set length.

During this interval, the wheel peripheral acceleration increases so that the limit (+a) is exceeded.

The pressure is still steady.

At the end of step 4, peripheral acceleration exceeds the limit (+A), relatively high.

The braking pressure increases until the limit (+A) is exceeded.

In the step 6 the braking pressure is kept again steady, as the limit (+a) has been exceeded.

At the end of this step, the wheel peripheral acceleration goes under the limit (+a).

This means that the wheel has reached the stable range of the curve of the braking stroke-skidding coefficient and braking is slightly too low.

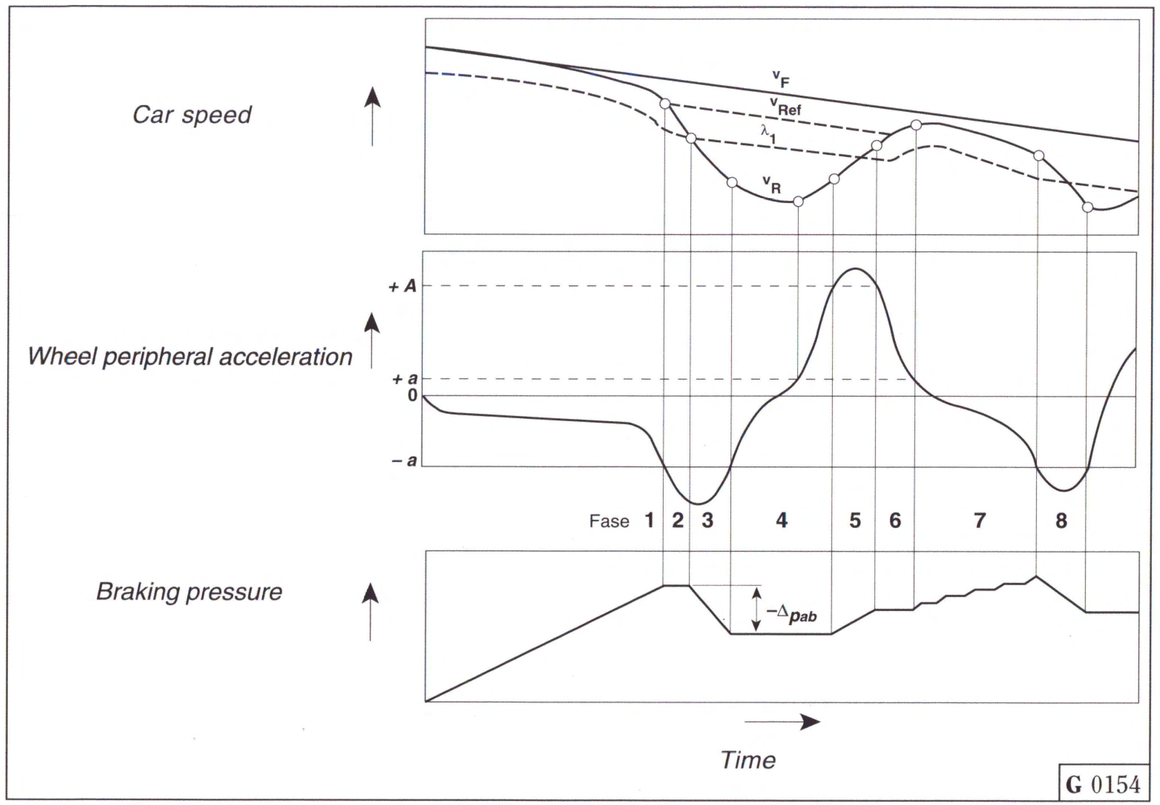

Fig. 26 - ABS adjustment cycle, with average or high braking stroke values

v_F - Car speed;
V_{ref} - Reference speed;
V_R - Wheel peripheral speed;
l_1 - Skidding limit;
+A, +a - Wheel peripheral acceleration limits;
-a - Wheel peripheral deceleration limit;
$\Delta_{p\ ab}$ - Braking pressure reduction.

Braking pressure is thus increased gradually (step 7) until the peripheral deceleration of the wheel exceeds the limit (-a) (end of step 7).

This time, the braking pressure is immediately reduced without generating a signal λ_1.

Depending on the friction conditions, the adjustment cycles range from 4 to 10 cycles per second.

Thus, the signal electronic processing must be very quick and the electromagnetic valves should have a reply time within a few thousandths of second.

System diagnosis with Diagnosis System SD-1

The Bosch 5.3 ABS ECU is capable of performing system diagnosis and communicating with the Diagnosis system.

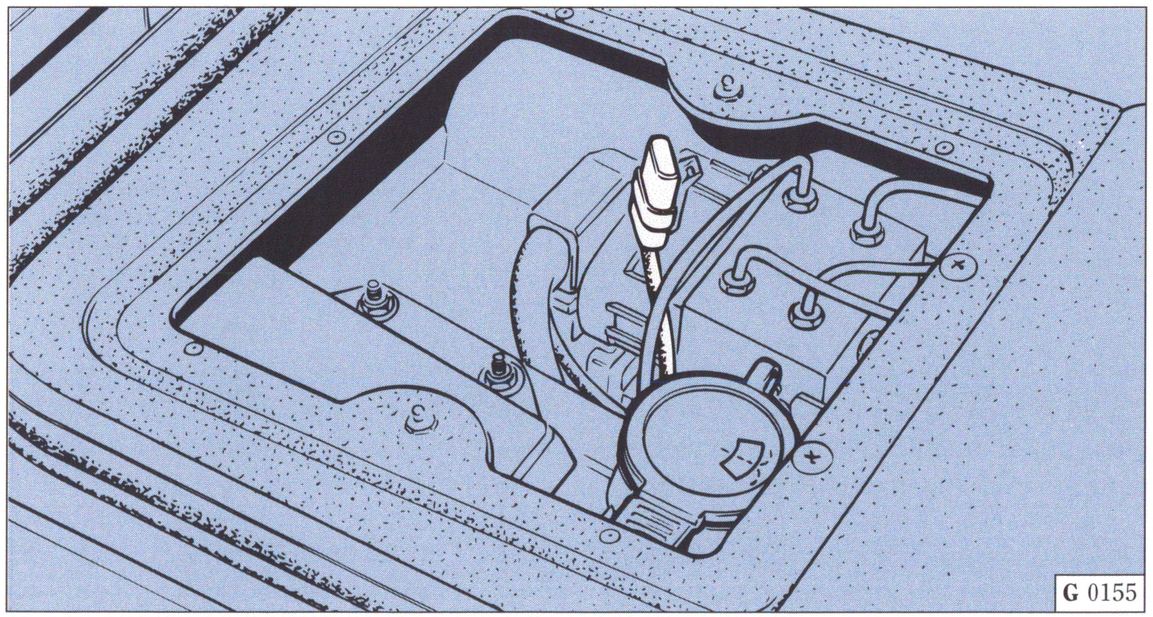

Fig. 27 - Diagnosis system SD-1 connection.

The ECU is integrated in the electrohydraulic control unit.

The diagnosis system can be used as follows:

1 - Parameter display.
2 - Error display.
3- Driven diagnosis.
4 - Active diagnosis.
5 - Help messages.
6 - Buffer.
7 - Automatic cycle.

Display of ECU parameters

The data which can be displayed are:

– brake pedal switch;
– pump motor;
– valve relay condition;
– engine speed;
– left front wheel speed;

– right front wheel speed;

– left rear wheel speed;
– right rear wheel speed.

Error display

The ECU can detect and send to the SD-1 the following errors:

– left front ABS valve (intake);
– right front ABS valve (intake);
– rear ABS valve (intake);
– left front ABS valve (exhaust);
– right front ABS valve (exhaust);
– rear ABS valve (exhaust);
– solenoid valve relay;
– toothed wheel tooth error;
– recirculation pump;
– no signal in the left front toothed wheel sensor;
– discontinuous signal in the left front toothed wheel sensor;

– no signal in the right front toothed wheel sensor;
– discontinuous signal in the right front toothed wheel sensor;
– no signal in the left rear toothed wheel sensor;
– discontinuous signal in the left rear toothed wheel sensor;
– no signal in the right rear toothed wheel sensor;
– discontinuous signal in the right rear toothed wheel sensor;
– battery voltage;
– brake pedal switch;
– ECU;

Moreover, the SD-1 indicates the type of error which has occurred, highlighting the malfunction with some messages as follows:

– short circuit towards battery + or exceeding of the upper threshold;
– short circuit towards earth or exceeding of the lower threshold;
– interruption in the circuit (not always recognizable: an interruption of an input or an output towards an electronic device can be seen as a short circuit towards battery + or towards earth);

– conflicting sensor values;
– error present at the moment;
– error absent at the moment.

Driven Diagnosis

The SD-1 stores the programmes for the part guided diagnosis.

The driven diagnosis can be started both after an error signalling by the ECU or by selecting the wished parameter in the “Error” page and pressing “Enter”.

Active Diagnosis

The active tests that can be made by the SD-1 Diagnosis System are:

1 - Left front toothed wheel sensor.

2 - Right front toothed wheel sensor.

3 - Left rear toothed wheel sensor.

4 - Right rear toothed wheel sensor.

5 - Left front solenoid valve.
6 - Right front solenoid valve.
7 - Rear solenoid valve.
8 - Pump motor.
9 - Static test on all actuators.
10 - Parameters.
11 - Bleed.

Help messages

Whenever the word “help” appears at the bottom of the screen it is possible to display Help messages concerning the operation being performed or the screen data, or even the parameter reference values, by pressing the “F1” key.

Buffer

The diagnosis system allows a visual trend of one or more parameters to be displayed graphically or, if necessary, printed out. This will assist in the solving of malfunctions and in the tuning of the cylinder banks.

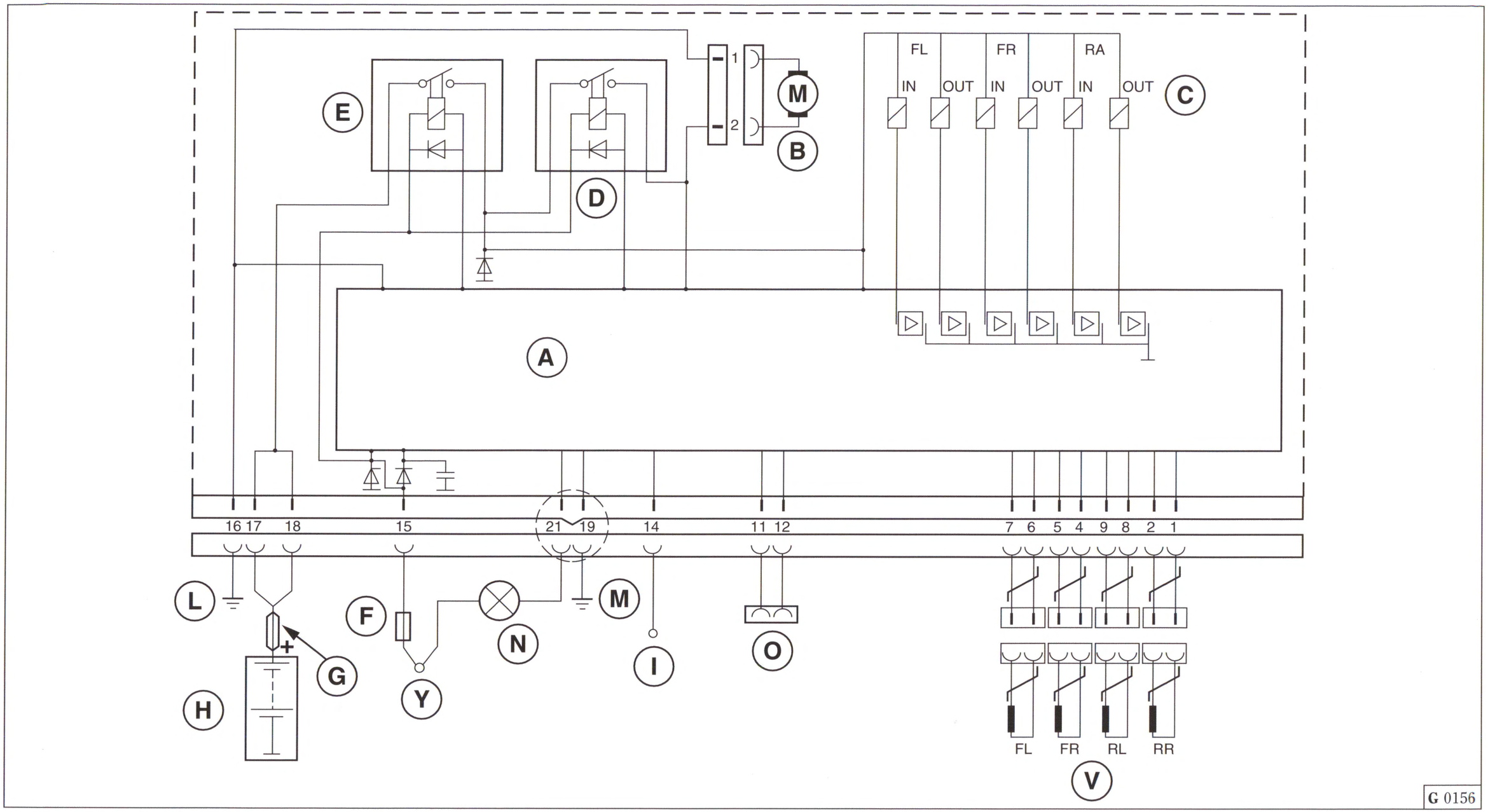

Fig. 28 - ABS wiring diagramme

A - ECU; **B** - Motor; **C** - Solenoid valve assembly; **D** - Pump relay; **E** - Valve relay; **F** - Pump feeding fuse; **G** - Electronic power supply fuse; **H** - Battery; **I** - Braking contact; **L** - Ground; **M** - Ground; **N** - ABS warning light; **O** - Diagnosis socket; **V** - Wheel speed sensors; **Y** - Key-operated supply.

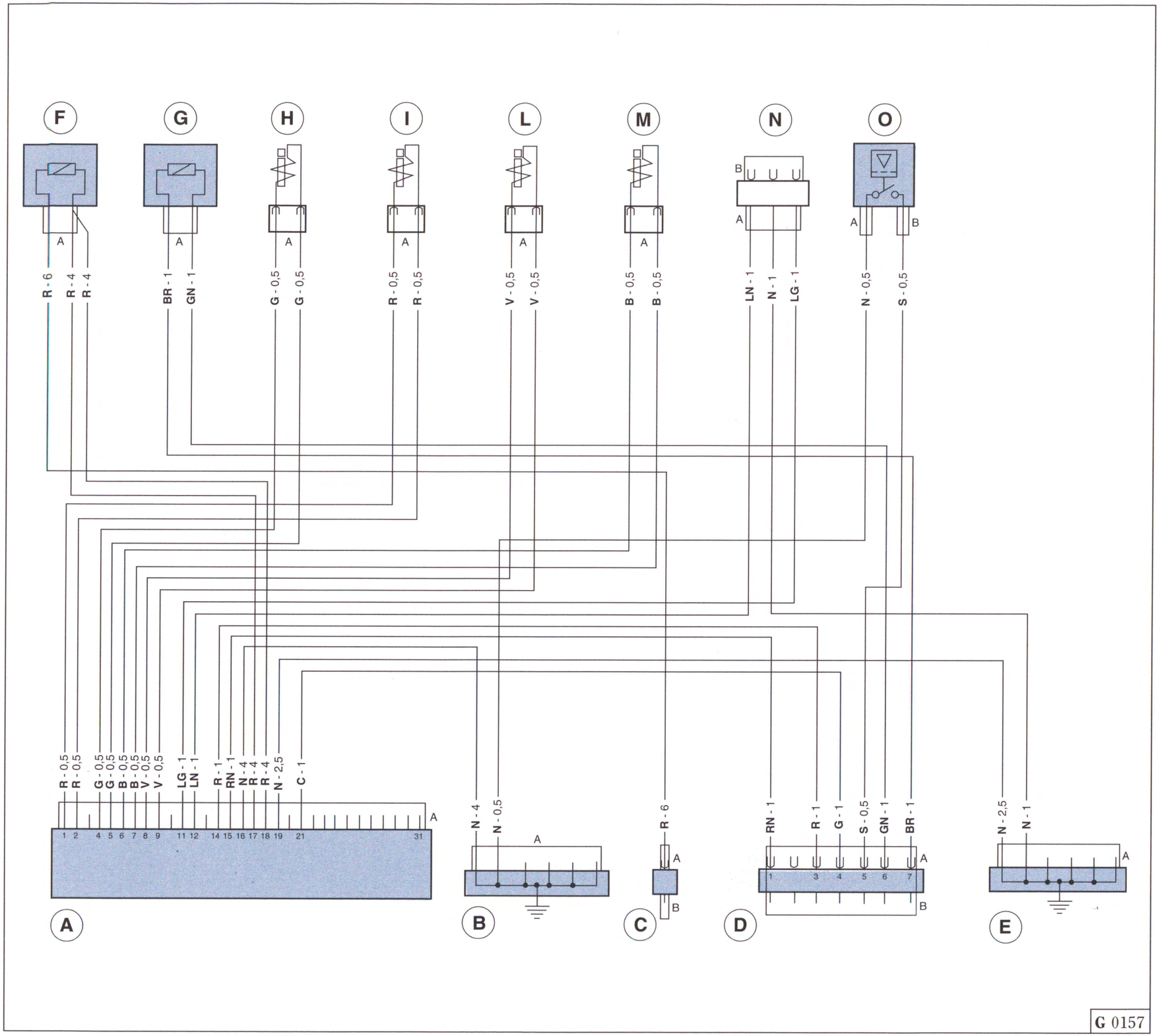

Fig. 29 - ABS electrical system

A - ABS ECU; **B** - Ground; **C** - ABS-instrument panel connecting joint; **D** - ABS-instrument panel connecting joint; **D1** - Key-operated supply; **D3** - Brake pedal switch; **D4** - ABS warning light; **D5** - Brake failure warning light; **D6** - + 15; **D7** - Fuse-protected + 15; **E** - Ground; **F** - Pump supply fuse 60 A; **G** - Electronic power supply fuse 10 A; **H** - Right front sensor; **I** - Right rear sensor; **L** - Left rear sensor; **M** - Left front sensor; **N** - Diagnostic socket joint; **O** - Brake oil level sensor.

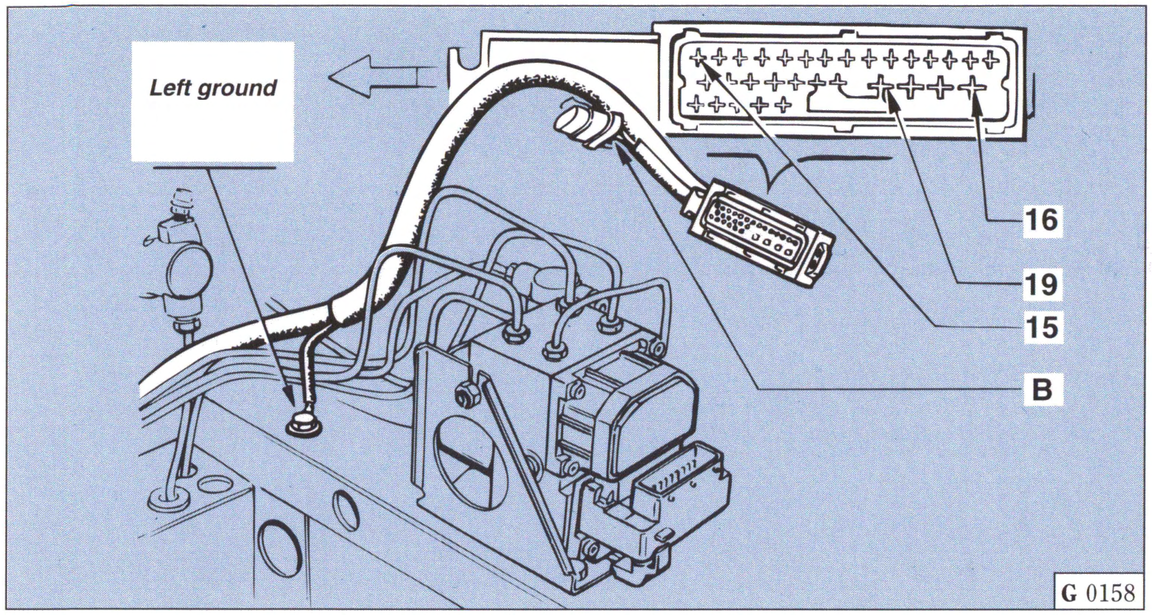

Fig. 30 - Ground multiplying, front left compartment, formed by two cables:

- black cable ø 1 to the diagnosis socket;
- black cable ø 2.5 to the pin 19 of the ECU.

Connector pin 15 = ECU power supply (key-operated).

B - Diagnosis socket: black central cable ø 1 (ground).

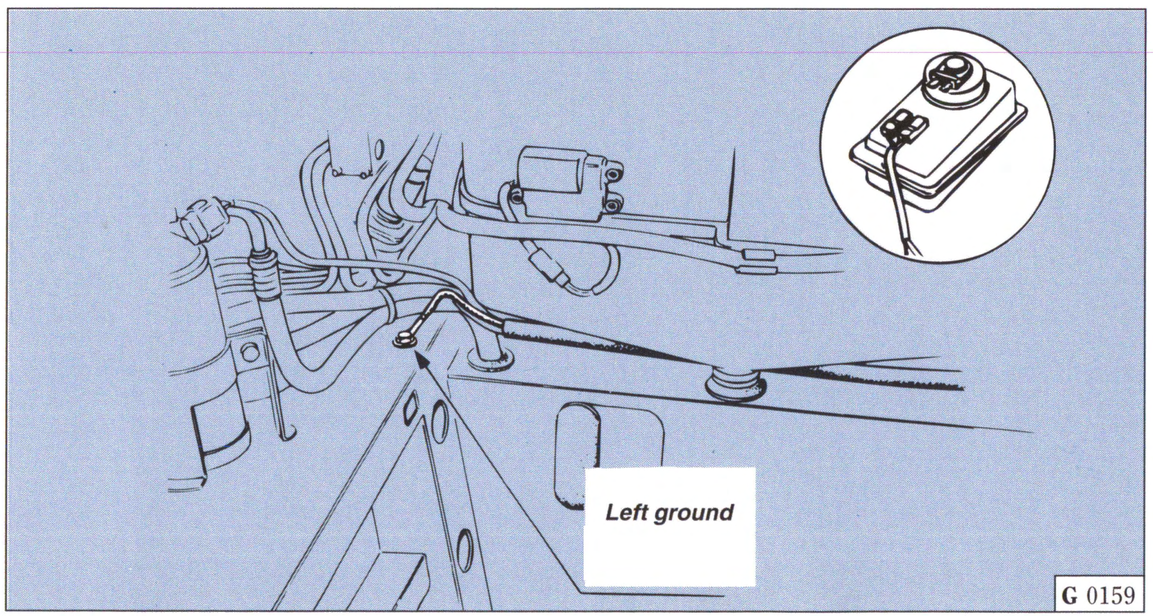

Fig. 31 - Ground multiplying, front right compartment, formed by two cables:

- black cable ø 0.5 to the brake fluid level sensor;
- black cable ø 4 to the pin 16 of the ECU (see Fig. **29**).

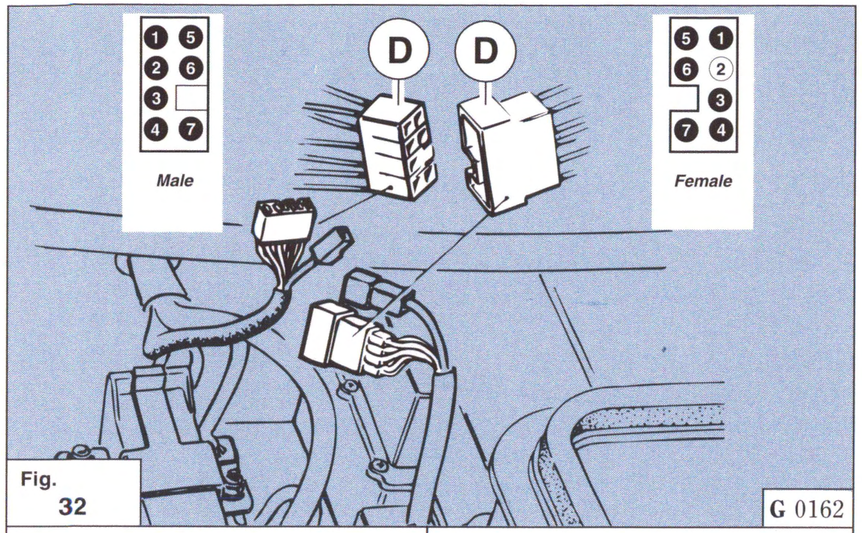

Male		Female	
1 -	Red/White	1 -	Red/White
2 -	White	2 -	Free
3 -	Red	3 -	Red
4 -	Yellow	4 -	Yellow
5 -	Pink	5 -	Pink
6 -	Yellow/Black	6 -	Yellow/Black
7 -	White/Red	7 -	White/Red

Fig. 32

*Harness of the instrument panel joint C/D (see Fig. **29**).*
Instrument panel connecting joint C, red cable ø 6.
Instrument panel connecting joint D.

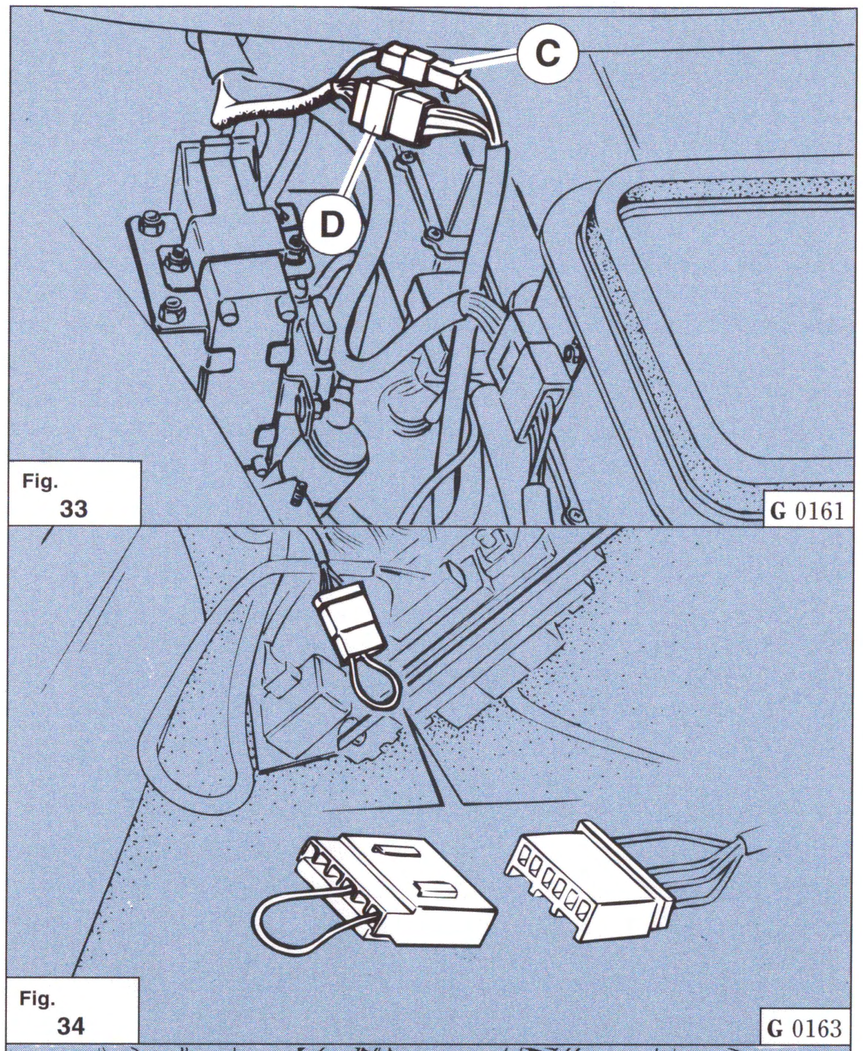

Fig. 33

*Joint C/D for instrument panel connection (see Fig. **29**, Electrical system).*

Fig. 34

*Connection of the ECU power supply cable D1 to D7, placed under the fuse-holding box, inside the compartment (see Fig. **29**).*

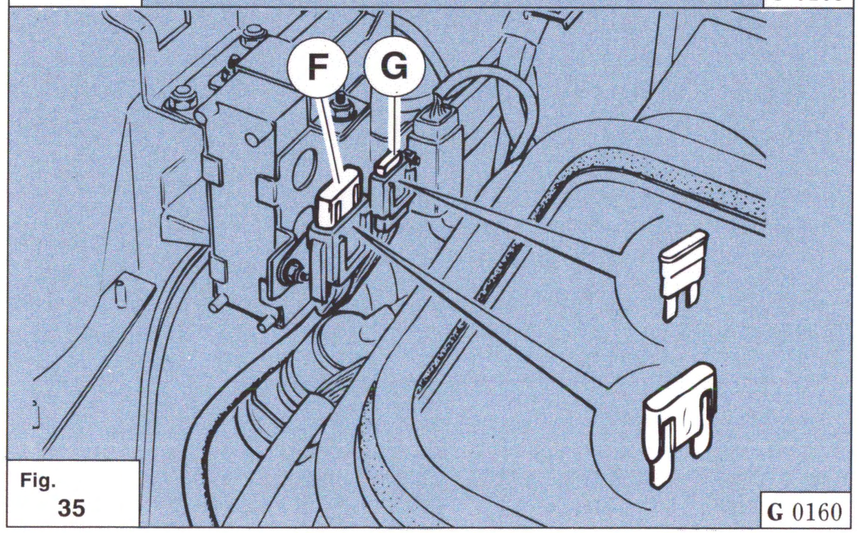

Fig. 35

F -
60 A fuse for pump supply.

G -
10 A fuse for electrical system.

Instructions for a correct service

– The electrohydraulic control unit cannot be overhauled and it is trouble-free unless it is tampered with. If a failure is found out, replace the whole control unit.

– After each replacement of an electrohydraulic control unit, revolution sensor or harness (especially after a crash), check the whole ABS system using the tester.
– After any intervention on the ABS system hydraulic circuit or on the brake system, fill with brake fluid and bleed air as described on page **G12**, then check the sealing of all the connections.

– The electrohydraulic control unit is supplied already filled with brake fluid and with solenoid valves not powered. The electrohydraulic control unit filled with brake fluid can be kept in stock for at most 5 years, then it must be returned to Bosch for an overhaul.

– While removing the electrohydraulic control unit, do not overturn the whole assembly to avoid any leakage of the fluid from the hydraulic part.

Note: the brake fluid is highly corrosive and it could damage the bodywork in case of accidental contact.

– At the new assembly, pay attention to the fittings: to avoid any error in the connection of the braking circuit different parts during repair, follow the assembly diagramme on page **28**.

F355

February *'99*

BRAKES G1

G1

INDEX

- General information **G.3**
- Specification and data **G.3**
- Brake booster **G.8**
- Adjustment of features brake pedal free travel **G.9**
- Brake calipers **G.11**
- Brake pads removal and replacement **G.12**

- Hand brake adjustment **G.15**
- ABS system **G.17**
- Theory **G.19**
- Operation **G.23**
- Components **G.24**
- Adjustment steps **G.29**
- ABS adjustment cycle **G.31**
- System diagnosis with SD-1 Diagnosis System **G.34**
- ABS wiring diagram **G.39**
- Tightening torque summary table **G.43**

	TIGHTENING TORQUE SUMMARY TABLE			Thread mm	Torque Nm
	Front and rear wheel sensor fastening			**M6**	**6,4**
	Nut for front and rear shock absorber fastening to the chassis			**M8**	**20**
	Brake control hydraulic control unit fastening			**M8**	**20**
	Brake pipe fastening			**M10 x 1**	**14**
	Handbrake shoe control lever supporting pad fastening			**M10 x 1,25**	**39**
	Brake pipe fastening to ABS ECU			**M12 x 1**	**15**
	Caliper fastening screw (valid until stocks of screw 132213 finish)			**M12 x 1,25**	**63**
	Caliper fastening screw to rear hub-holder (valid when stocks of screw 132213 finish)			**M12 x 1,25**	**85**
	Caliper fastening screw to front stub axle (valid when stocks of screw 132213 finish)			**M12 x 1,25**	**100**
	Toothed wheel pin fastening nut to front bearing			**M24 x 1,5**	**275 ***

* Tightening torque with lubrication of coupling surfaces.